Optional Installation Guide

This manual provides guidance on the installation of luggage parts for 1000UTV fuel series models. Please select the corresponding accessories according to the model for installation.

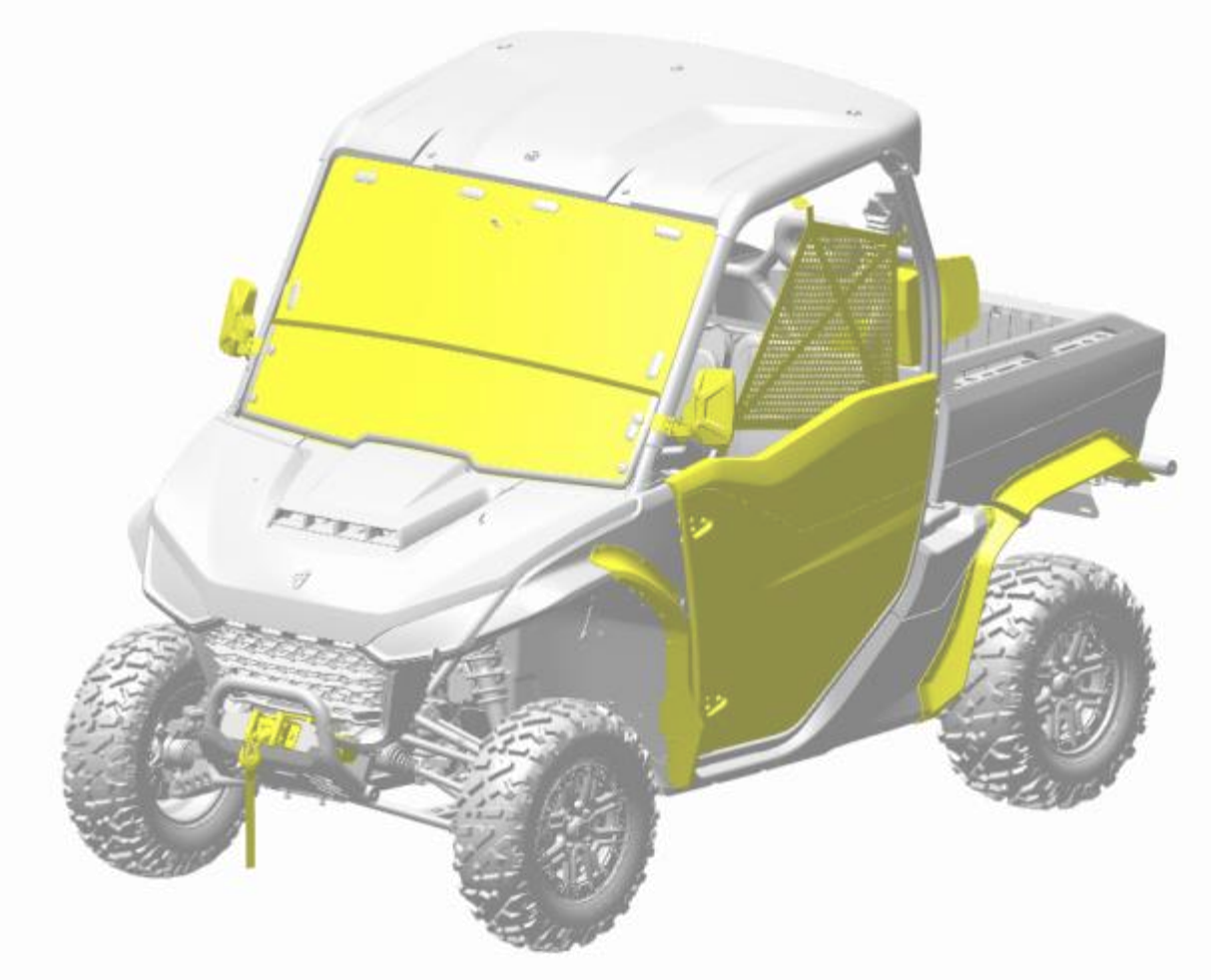

Before assembly:

Read the installation guide first, and check the parts and tools required for assembly. Please keep the installation guide for future reference and order optional parts. Optional parts can be ordered on the Segway official website.

Before installation:

Place the vehicle on flat ground.

stop the engine

Turn the ignition lock key to the "OFF" position and remove the key

Half door installation

Left and right half door installation

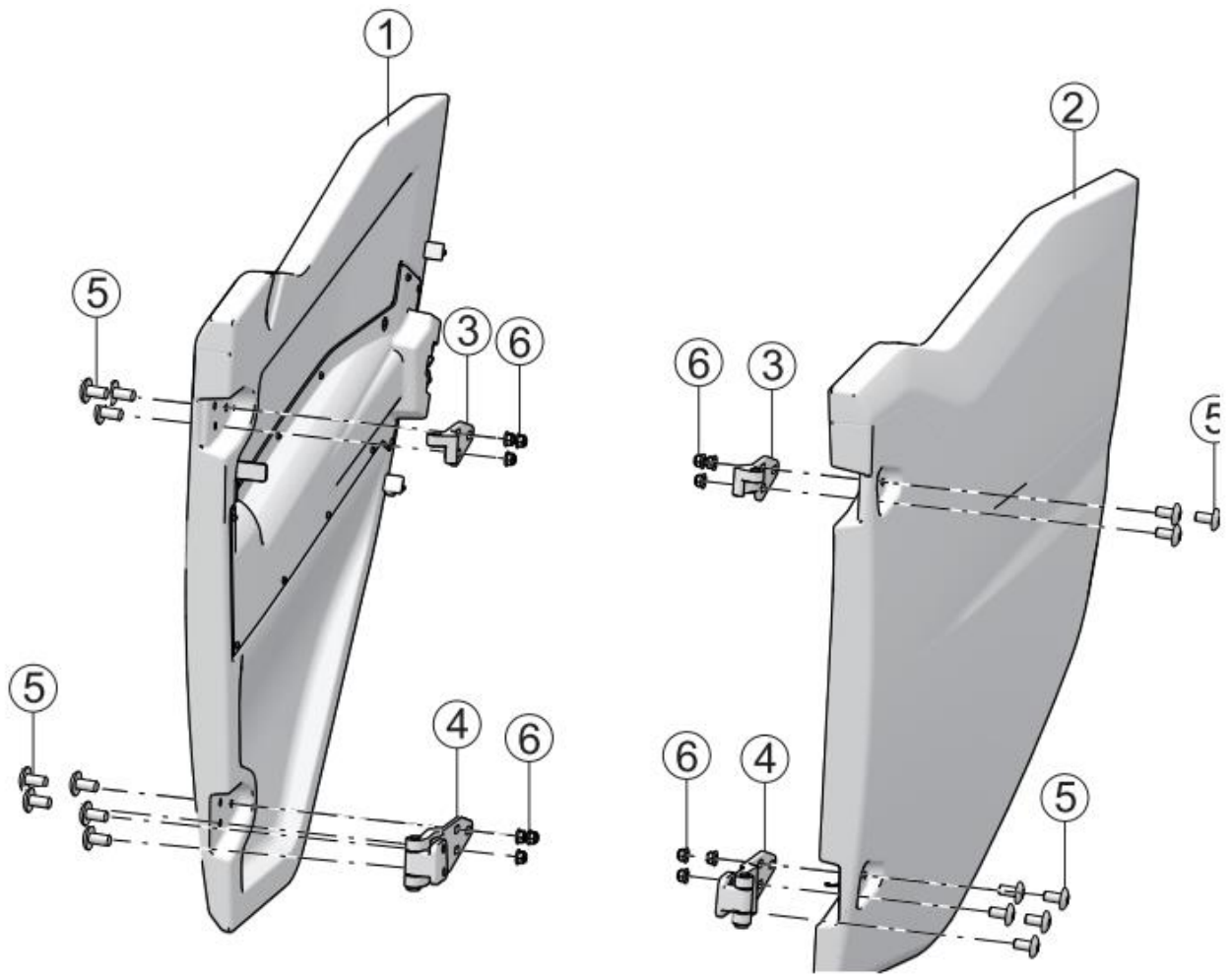

	Parts Name	Parts Number	QTY	Remark
1	RIGHT HALF DOOR ASSY	U01H18200001	1	
2	LEFT HALF DOOR ASSY	U01H18100001	1	
3	U01 UPPER LEFT DOOR BUTT SEAT Ⅰ	U01C40301001	1	
4	U01 UPPER RIGHT DOOR BUTT SEAT Ⅰ	U01C40601001	1	
3	LOWER HINGE (LEFT)	U01C40302001	1	
4	LOWER HINGE (RIGHT)	U01C40602001	1	
5	BOLT M8×25	T03000008003	16	
6	NUT M8	GBT061831003	12	

Half door installation

TIPS
The left and right half doors are installed in the same way.

1. Remove the hinge block cover under the left front end of the vehicle, which is a buckle-type quick disassembly part.

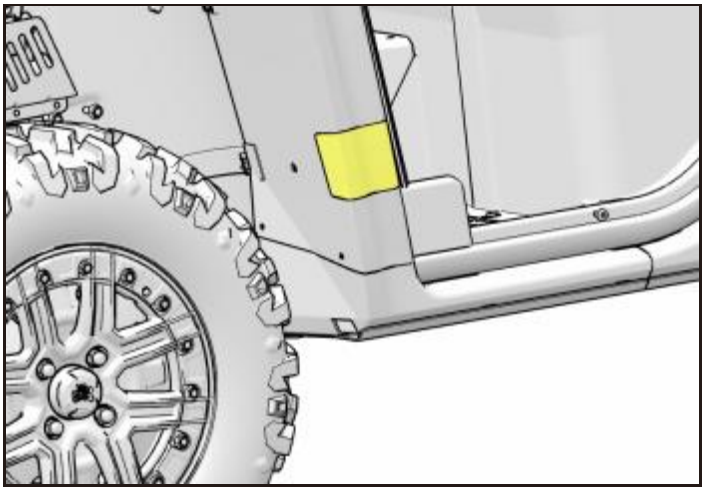

2. Remove the fixing bolts on the left and right foot fenders, and remove the left and right foot fenders.

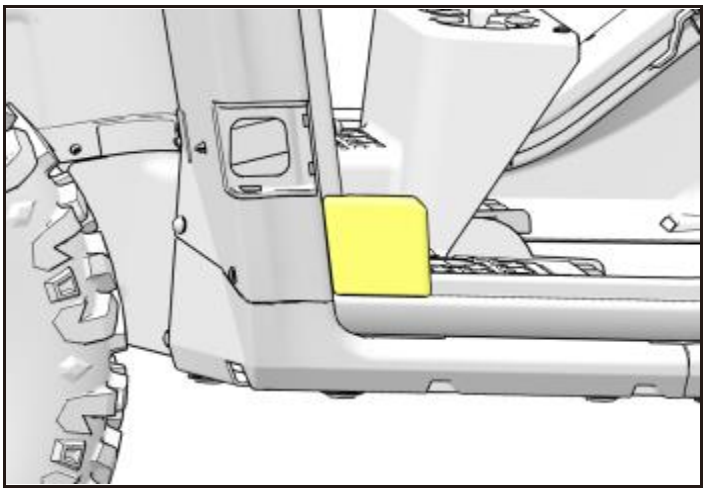

3. Install the lower hinge assembly of the half door in the corresponding fixing hole with 2 pieces of M8×25 inner hexagon bolts.

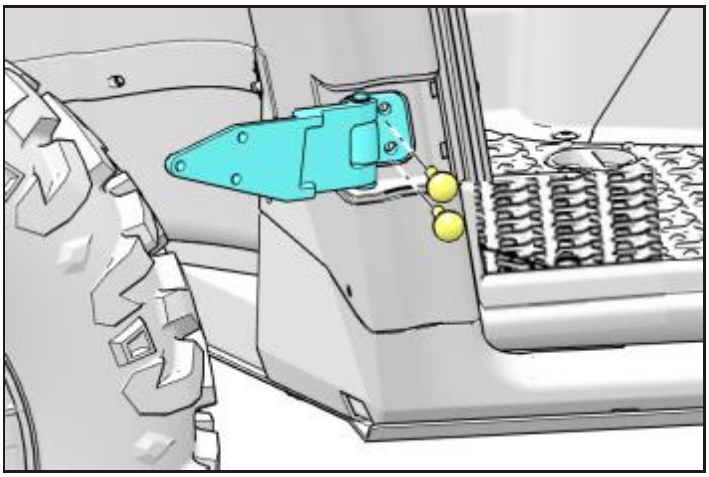

4. Install the upper hinge on the door with 3 M8×25 inner hexagon bolts and 3 M8 nuts.

TIPS
Do not fully tighten the bolts yet.

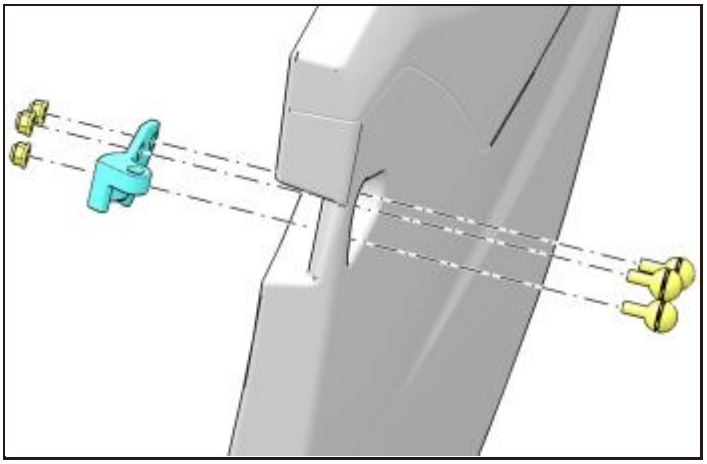

5. Insert the half door with the upper hinge installed into the upper hinge shaft.

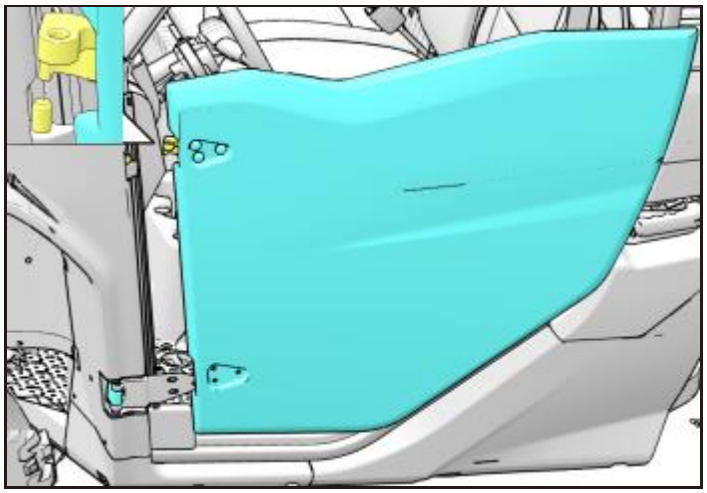

6. Align the lower hinge of the half door with the three fixing holes of the door, and fix it with 3 pieces of M8×25 inner hexagon bolts and 3 pieces of M8 nuts.

TIPS
Do not fully tighten the bolts yet.

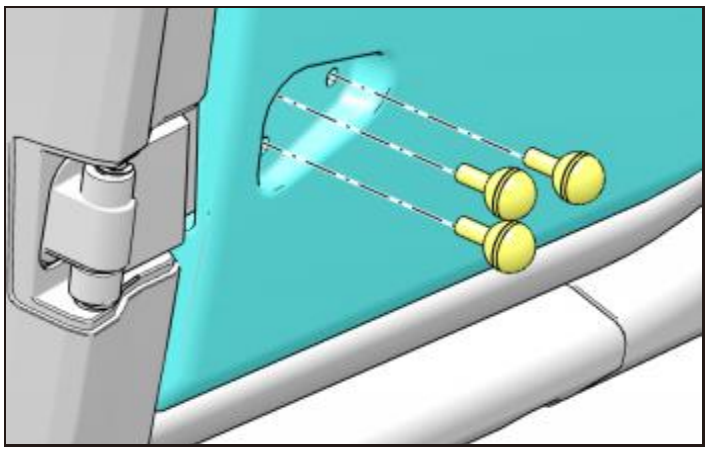

7. At this time, close and lock the half door, and make necessary adjustments.

Adjust several times until the adjustment is in place, then fix all the installations on the half door Tighten the set bolts.

Torque value: 30 ~ 40N m (3.0~4.0kgf m, 22.1~29.5ft lb)

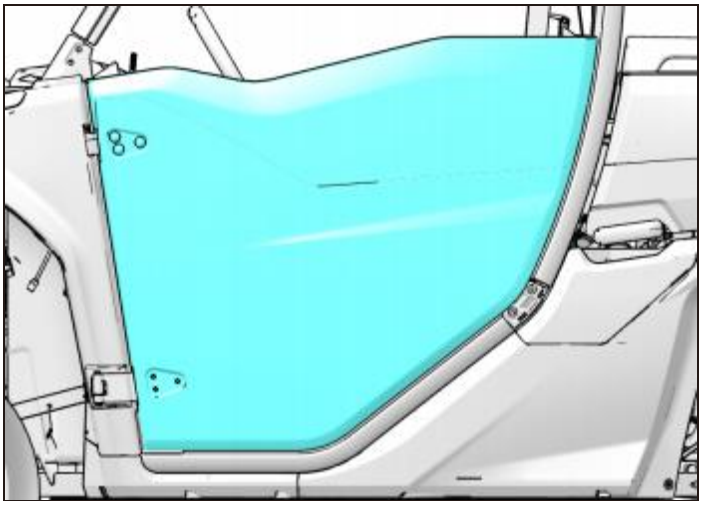

PC full door installation

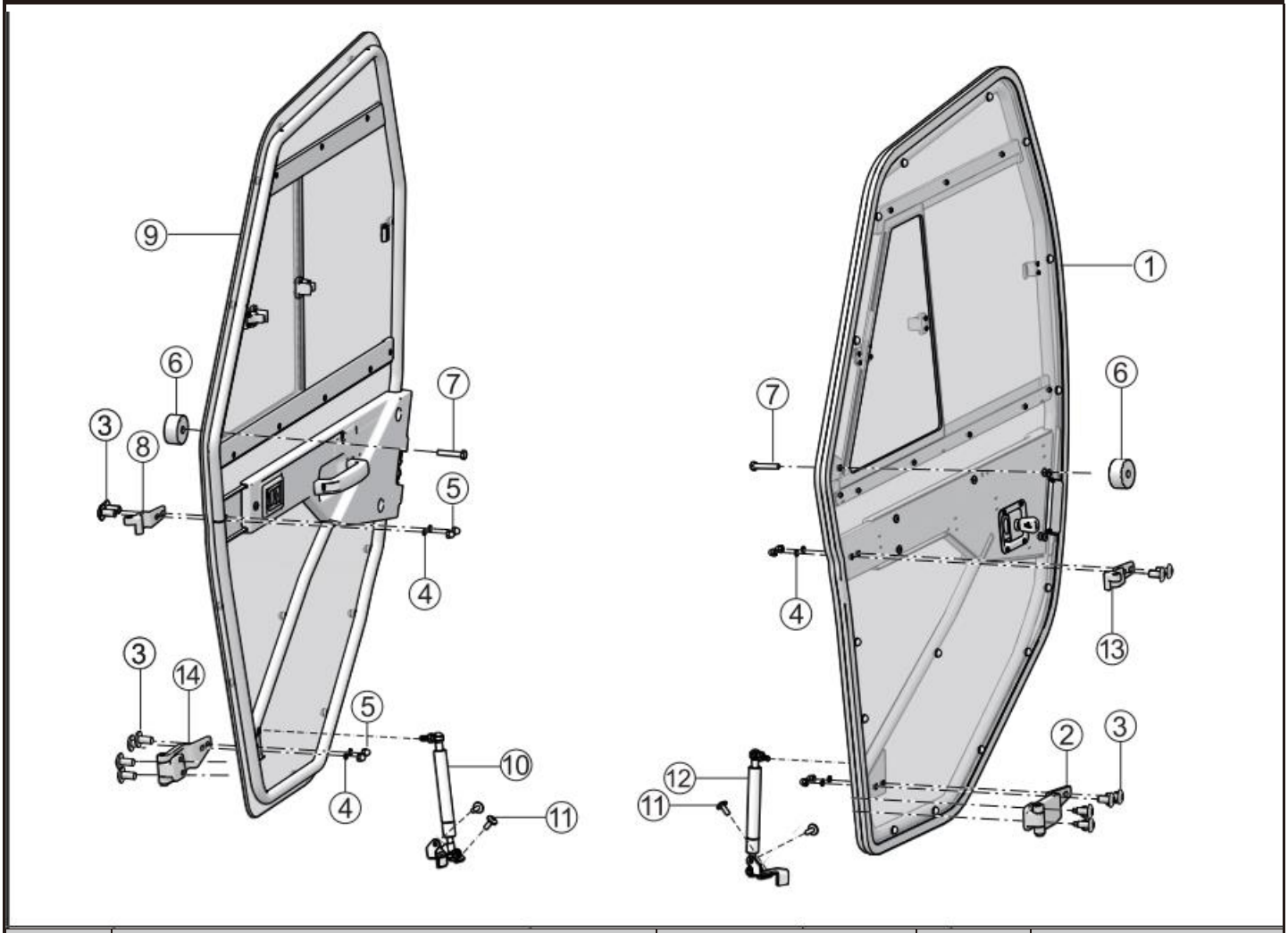

	Part Name	Part Number	QTY	Remark
1	LEFT PC DOOR ASSEMBLY	——	1	
2	LEFT PC DOOR LOWER HINGE ASSEMBLY	U01C53320001	1	
3	BOLT M8×25	T03000008003	12	
4	WASHER 8	GB0000093004	8	
5	CAP NUT M8	BG009230-08015-C81	8	
6	MIRROR PAD COVER	U01-C530001-DB0-00	2	
7	BOLT M10×1.5×55	BG057820-10055-C81	2	
8	RIGHT PC DOOR UPPER HINGE	U01-R043110-000-00	1	
9	RIGHT PC DOOR ASSEMBLY	——	1	
10	PC RIGHT FULL DOOR GAS SPRING ASSEMBLY	U01-C528100-PB0-00	1	
11	HEXAGON SOCKET LARGE PAN HEAD BOLT M6×16	T03000007002	4	
12	PC LEFT FULL DOOR GAS SPRING ASSEMBLY	U01-C518100-PB0-00	1	
13	LEFT PC DOOR UPPER HINGE	U01-R033110-000-00	1	
14	RIGHT PC DOOR LOWER HINGE ASSEMBLY	U01C54320001	1	

PC Full door installation

TIPS
The left and right sides are installed in the same way.

1. Remove the hinge block cover under the left front end of the vehicle, which is a snap-on quick release.

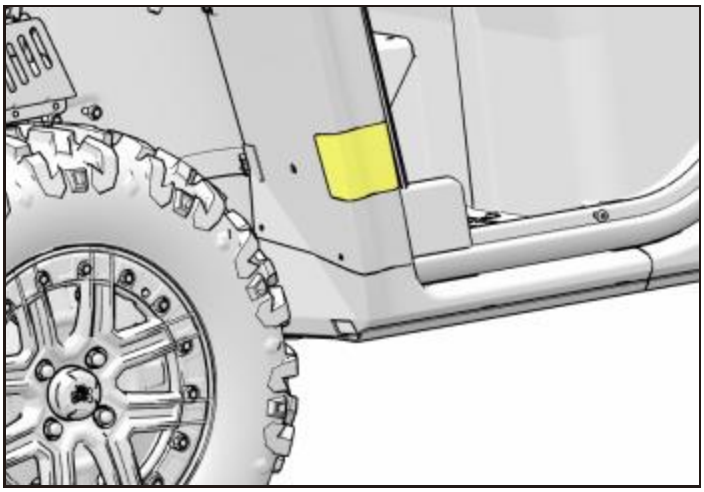

2. Remove the fixing bolts on the left and right foot fenders, and remove the left and right foot fenders.

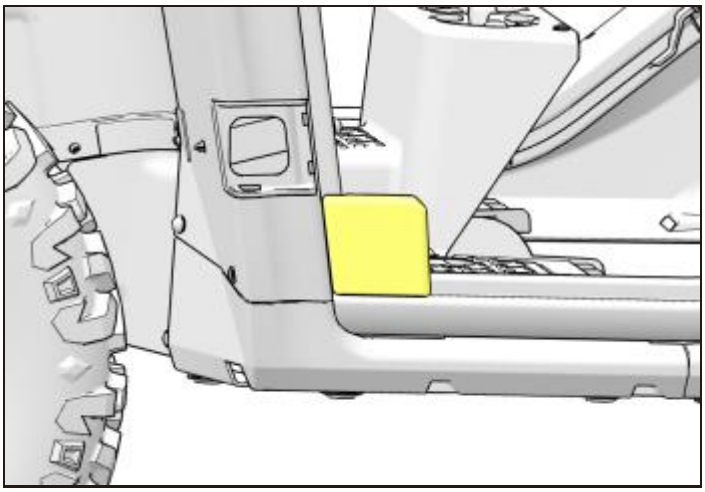

3. Install the lower hinge (pay attention to the left and right when installing) in the corresponding fixing holes with 2 pieces of M8×25 inner hexagon bolts.

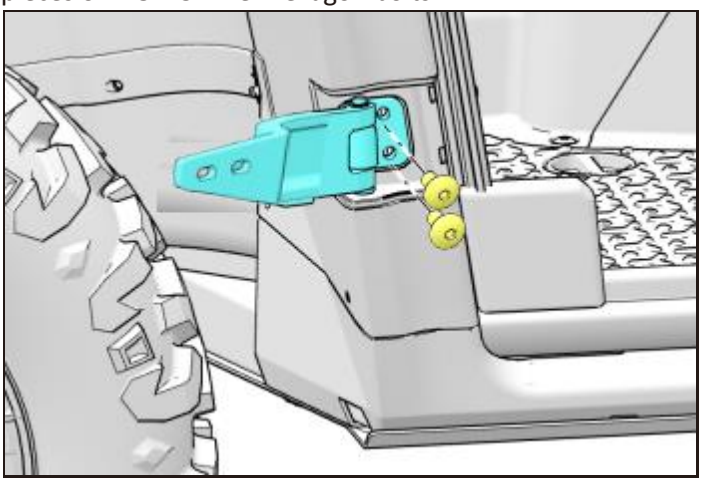

4. Install the upper hinge on the door with 2 pieces of M8×25 inner hexagon bolts, 2 pieces of M8 nuts and spring washers.

TIPS
Do not fully tighten the bolts yet.

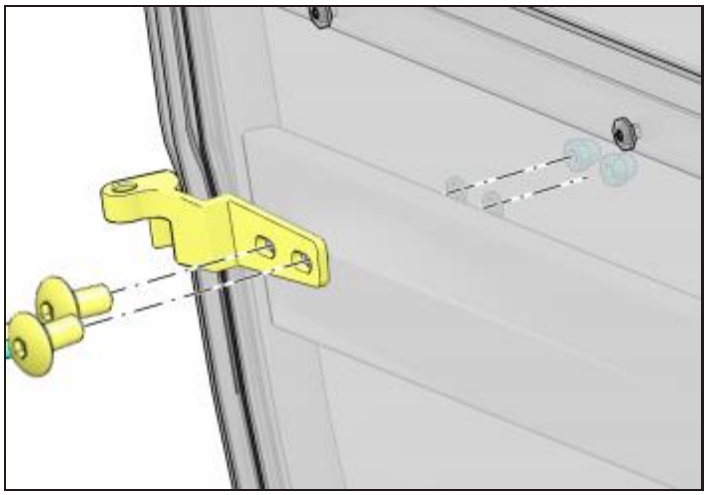

5. Insert the half door with the upper hinge installed into the upper hinge shaft.

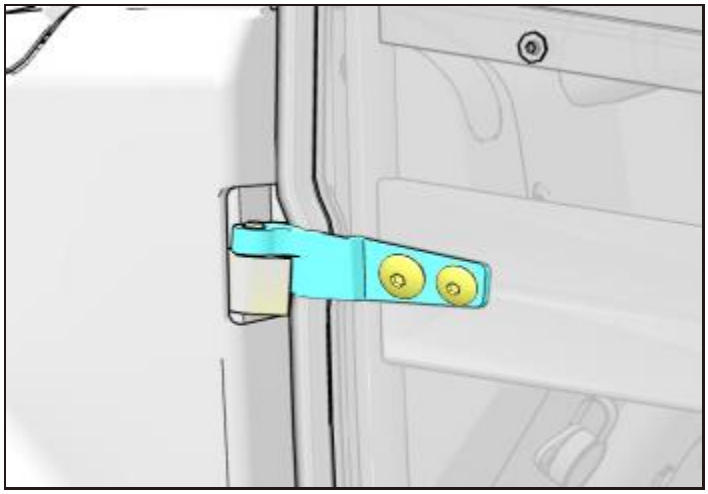

6. Align the lower hinge of the half door (pay attention to the left and right when installing) with the three fixing holes of the door, and fix it with 2 pieces of M8×25 inner hexagon bolts, 2 pieces of M8 nuts and spring washers.

TIPS
Do not fully tighten the bolts yet.

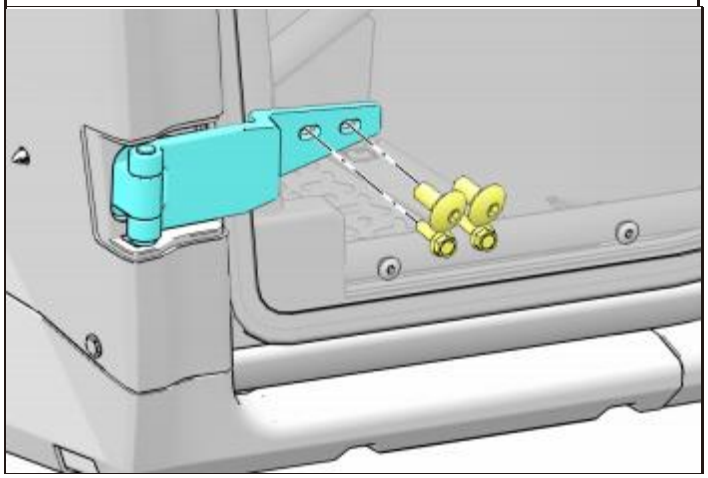

7. Screw the threaded end of the gas spring into the corresponding hole on the door.

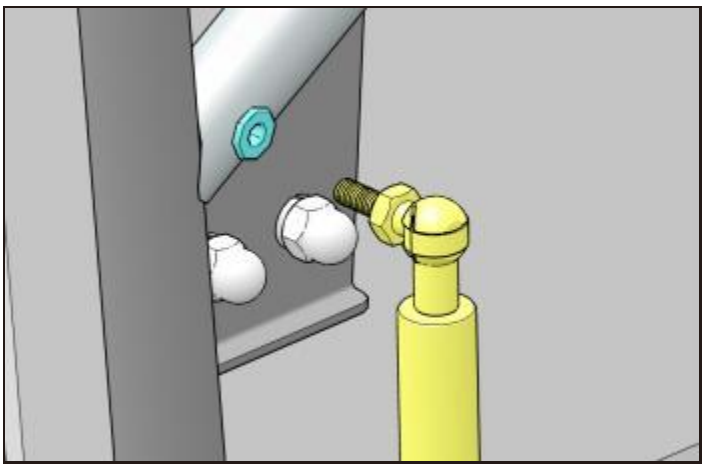

8. Connect the other end of the gas spring with 2 pieces of large pan-head inner hexagonal bolts M6×16 Fastened in place of previously removed toe fender.

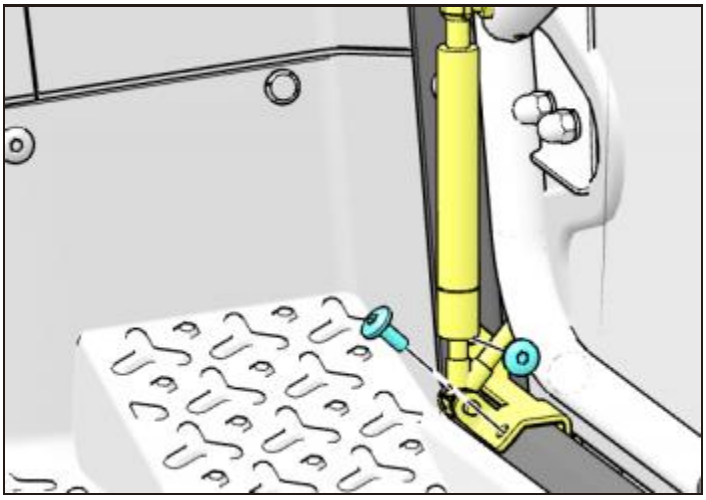

9. At this time, close and lock the installed door, and make necessary adjustments. Multiple adjustments can be made until the adjustment is in place, and all the PC doors on the There are mounting bolts tightened.

Torque value: 30 ~ 40N m (3.0~4.0kgf m, 22.1~29.5ft lb)

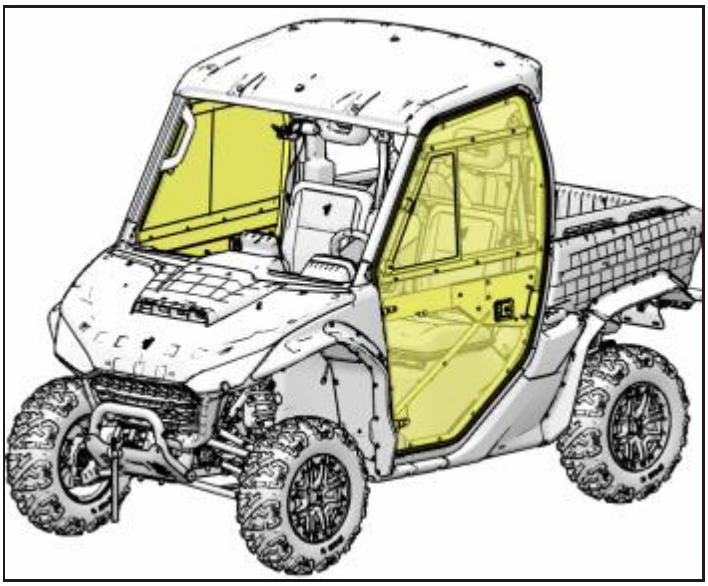

Front windshield assembly

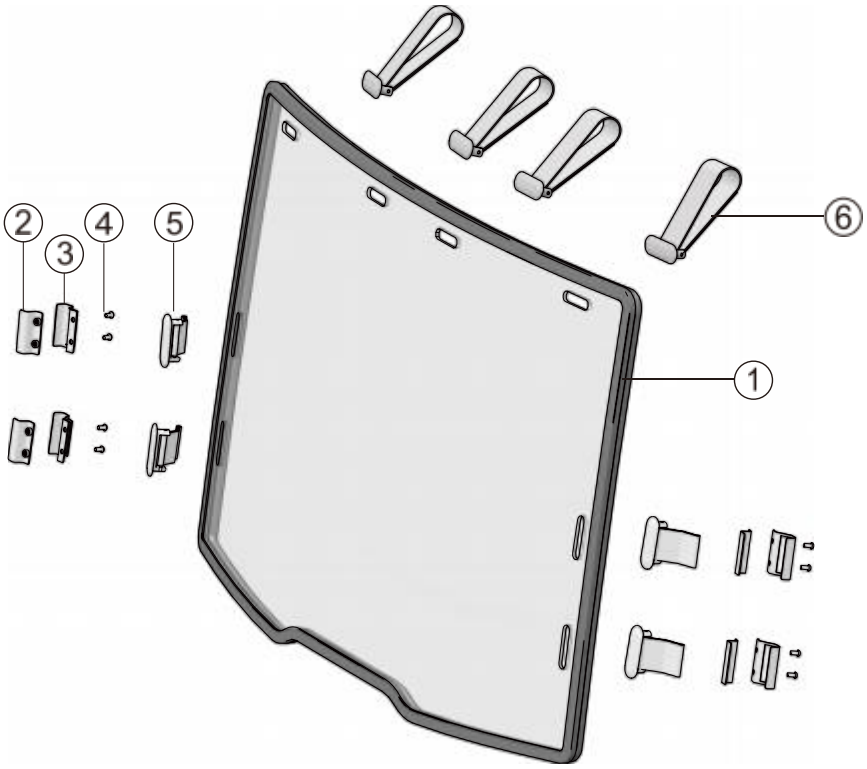

	Parts Name	Parts Number	QTY	Remark
1	PC FRONT FULL WINDSHIELD	U01R64010001	1	
2	CLIP 2	U01R64042001	4	
3	CLIP 1	U01R64041001	4	
4	HEXAGON SOCKET HEAD SCREWS M6×12	GBT000702001	8	
5	PLASTIC BUCKLE	U01R64021001	4	
6	Velcro Assembly- Top	U01R64020001	4	

Front windshield installation (full shield)

TIPS
The left and right half doors are installed in the same way.

1. Install the PC front full windshield body assembly at the front windshield position along the UTV roof beam and roof boundary;

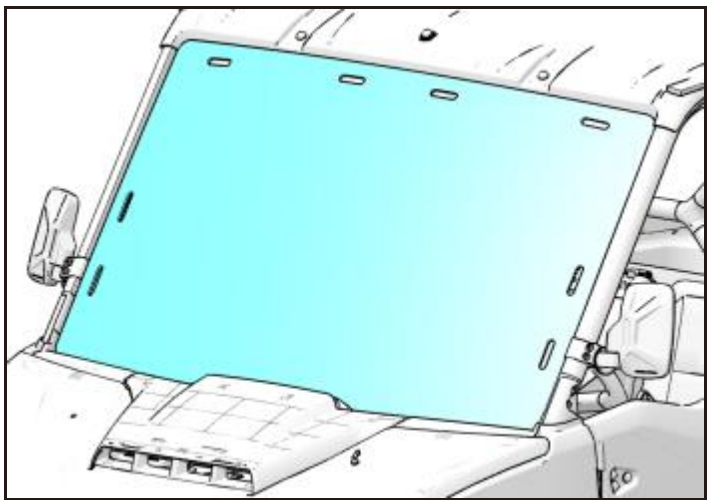

2. Fix clip ① and clip ② to the A-pillar pipe beams on the left and right sides of the UTV with the screw M6×12, and the position is the same as the installation hole of the PC front full windshield body (Two holes on the left and right sides) are basically aligned, torque value: 8 ~ 15N m (0.8~1.5kgf m, 6~11ft lb);

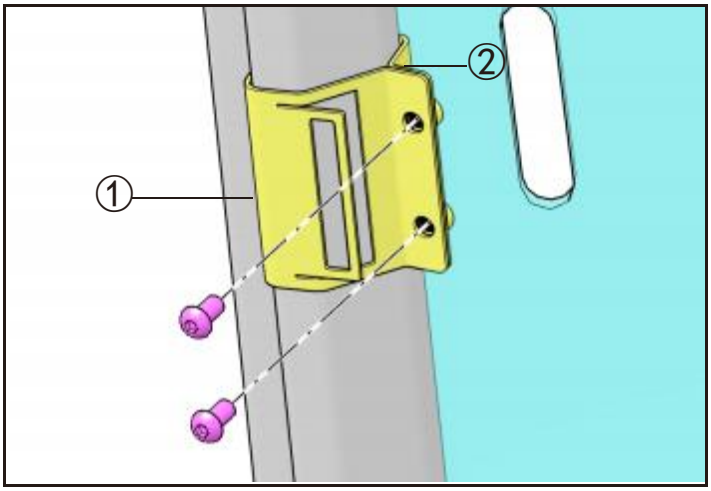

3. Pass the plastic buckle ③ through the hole on the windshield, and then use the side Velcro ④ to fasten the clip and the plastic buckle.

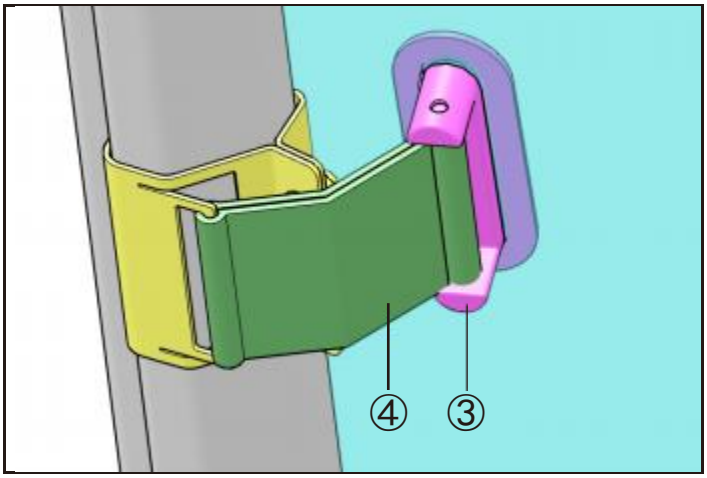

4. Put the upper fixing assembly through the installation holes of the PC front full windshield body in turn, and wrap the Velcro with the ceiling pipe beam to fix it; put the side fixing assemblies through the installation holes of the PC front full windshield body in turn, And combined with the fixed seat to wrap the Velcro to fix;

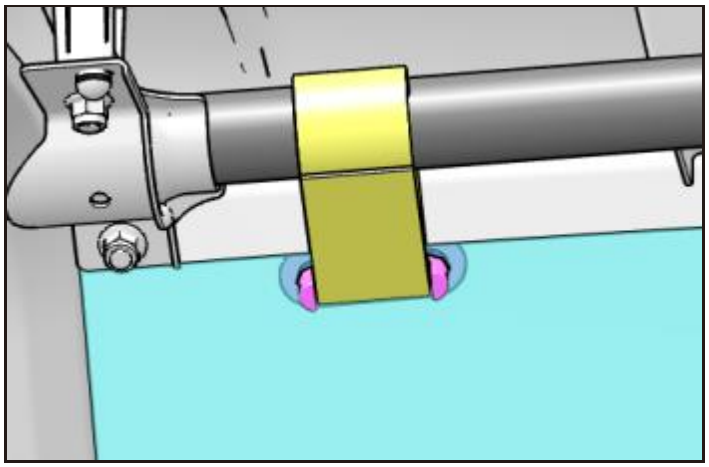

CAUTION
Rainy days will reduce the permeability of the windshield and affect the driver's sight. For your driving safety, the windshield must be removed in rainy days.

Rear windshield assembly

TIPS
The rear windshield assembly has two states: install according to the state selected.

Rear windshield assembly

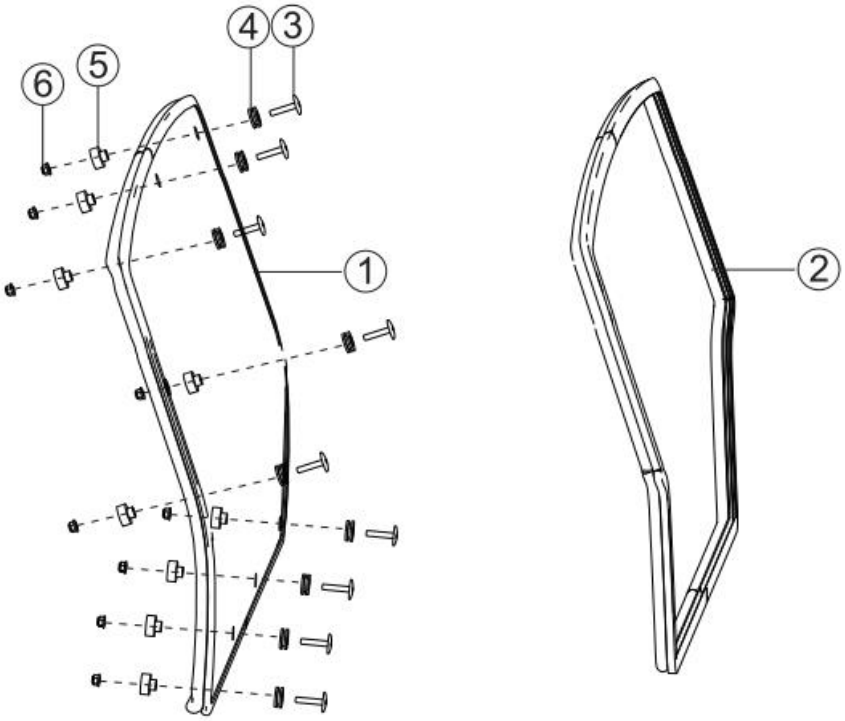

	Parts Name	Parts Number	QTY	Remark
1	PC Rear Windscreen - UTV	U01R62000001	1	
2	REAR WINDSHIELD ASSY-HIGH AIR INLET	U01R62000002	1	
3	LARGE FLAT HEAD SCREWS M8×40,WINDSHIELD	T03000009001	9	
4	WINDSHIELD RUBBER CUSHION	T00000004001	9	
5	U01 WINDSHIELD CUSHION LONGER	U01R62002001	9	
6	NUT M8	GBT061831003	9	

TIPS
This windshield is not suitable for high intake systems.

Rear windshield assembly installation

1. Align the holes of the rear windshield assembly with the mounting holes on the rear of the ceiling respectively

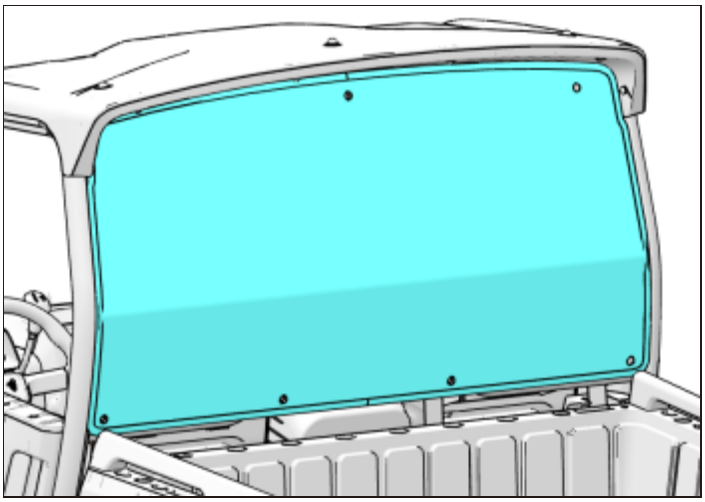

2. Install and fix the windshield assembly and the holes on the roof in sequence with screws M8×40, rubber pads, glass pad sleeves and nuts. Torque value: 8 ~ 15N m (0.8~1.5kgf m , 6~11ft lb);

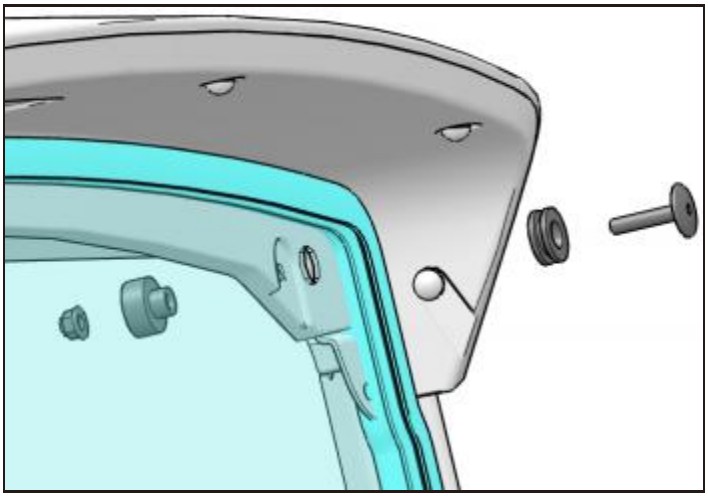

Front half windshield assembly

Front half windshield (before 2022.9)

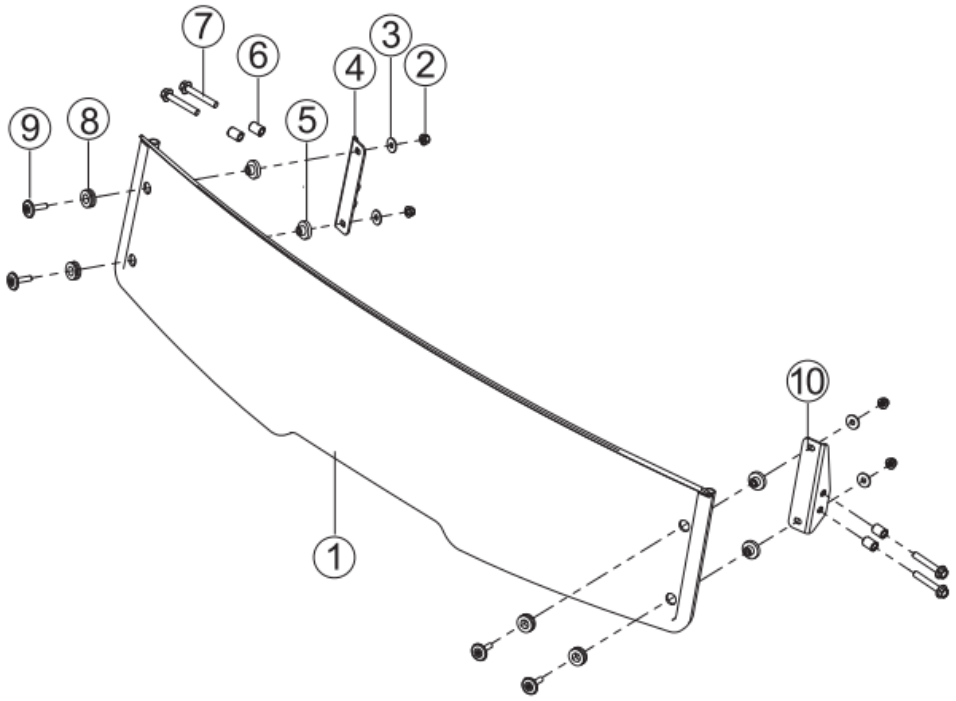

	Parts name	Parts number	QTY	Remark
1	HALF FRONT WINDSHIELD	U01R61002002	1	
2	NUT M8	GBT061831003	4	
3	WASHER 8	GBT000961003	4	
4	HALF WINDSHIELD FRAME R	U01R63014003	1	
5	U01 WINDSHIELD CUSHION	U01R62003001	4	
6	HALF WINDSHIELD Bush	U01R63015002	4	
7	BOLT M10×1.25×65	GBT005789034	4	
8	WINDSHIELD RUBBER CUSHION	T00000004001	4	
9	SCREW M8×35	T03000009002	4	
10	HALF WINDSHIELD FRAME L	U01R63013003	1	

Installation of front half windshield

TIPS
The installation method on the left and right sides is the same.

1. Install the left (right) bracket of the half gear with hexagonal flange bolts M10 × one point two five × 65. Fix the half gear bushing and nut under the left (right) A-pillar, do not fully tighten them yet;

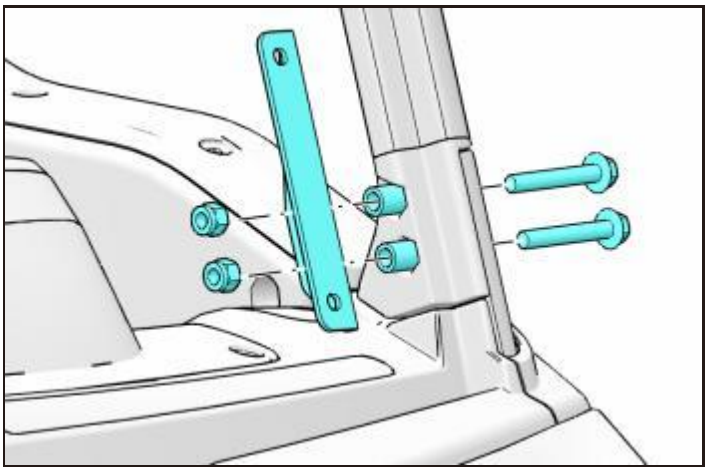

2. Clip the I-shaped windshield gasket and rear windshield gasket into the four hole positions of the half windshield (pay attention to the direction)；

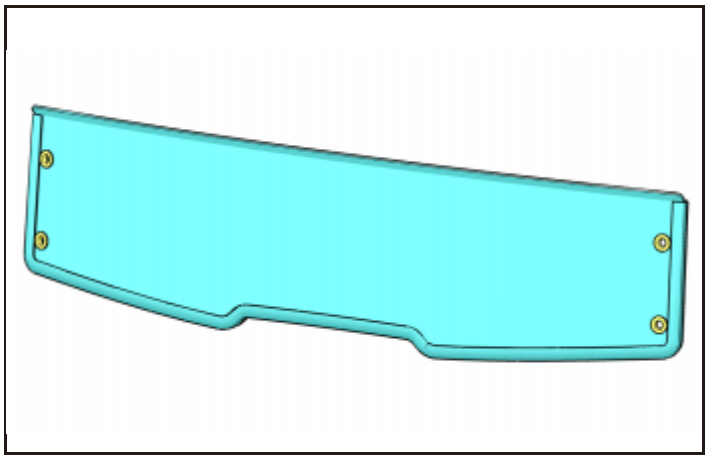

3. Align the half windshield with the fixing hole on the left (right) bracket of the half windshield.

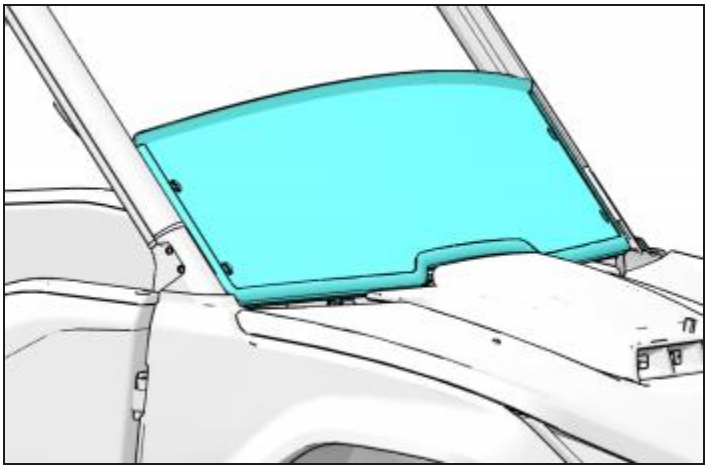

4. Use large flat head screws M8 × 40. Install and secure the holes on the half windshield assembly and bracket with nuts in sequence. Torque value: 8~15N · m (0.8~1.5kgf · m, 6~11ft · lb);

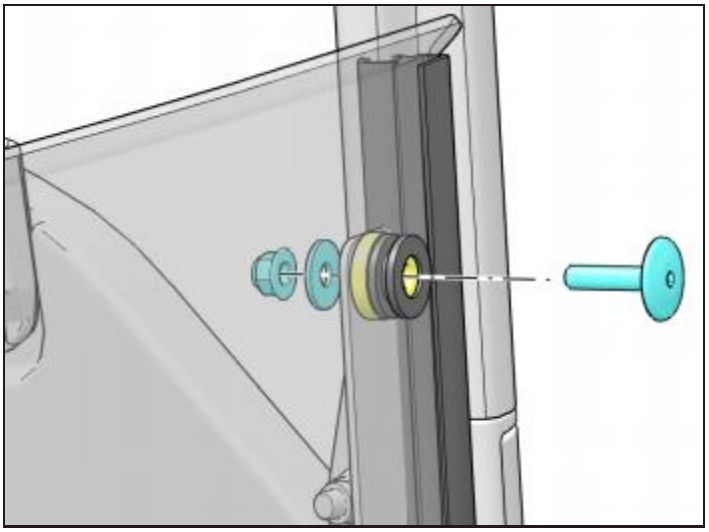

5. Tighten all fixing bolts;

Front half windshield(new)

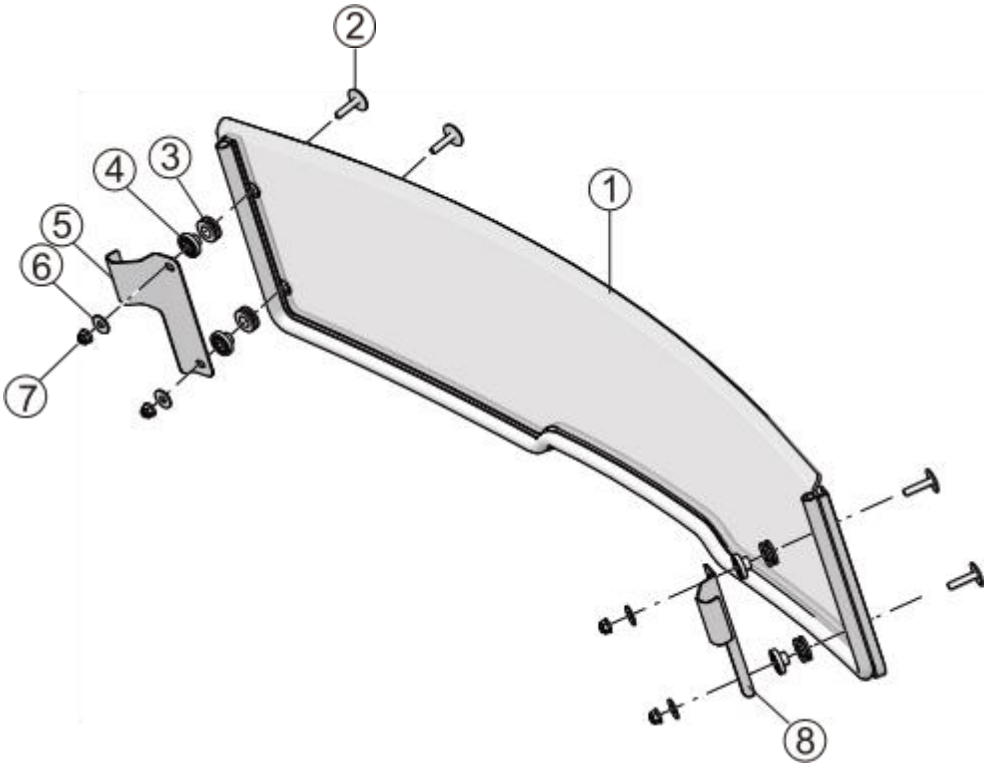

	Parts name	Parts number	QTY	Remark
1	HALF FRONT WINDSHIELD	U01R61002002	1	
2	SCREW M8×35	T03000009002	4	
3	WINDSHIELD RUBBER CUSHION	T00000004001	4	
4	U01 WINDSHIELD CUSHION	U01R62003001	4	
5	LEFT QUICK RELEASE BRACKET	U01-R152000-FB0-00	1	
6	WASHER8	GBT000961003	4	
7	NUT M8	GBT061831003	4	
8	RIGHT QUICK RELEASE BRACKET	U01-R153000-FB0-00	1	

Installation of front half windshield

TIPS
Avoid scratching the glass surface during installation.

1. Clip the four holes of the half section windshield into the windshield I-shaped rubber pad, and then clip the rear windshield cushion sleeve into the I-shaped rubber pad (the cushion sleeve is located on the inner side of the glass);

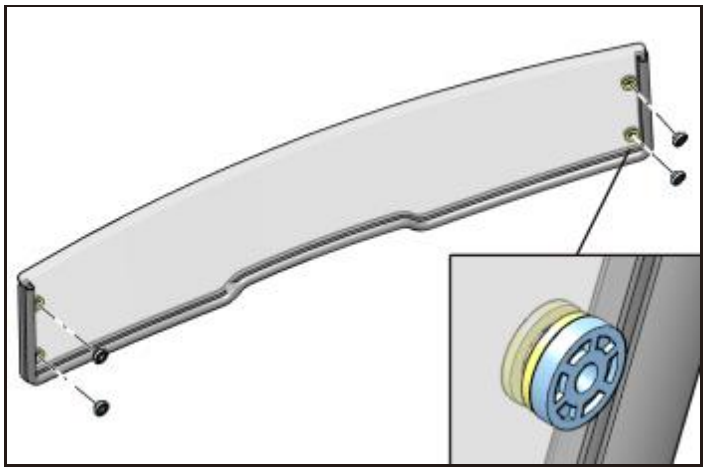

2. Place the front half glass at the grooves of the left and right A-pillar pipes, with the lower edge fitting under the front panel of the vehicle;

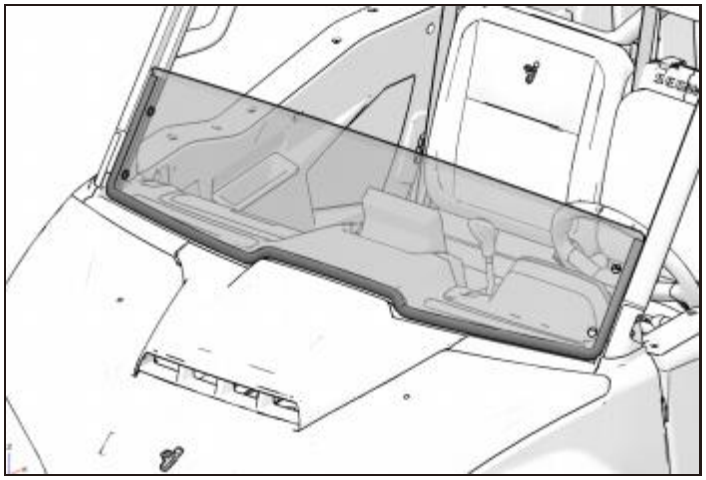

3. Clamp the half gear left (right) quick release bracket onto the A-pillar pipe, align the installation hole with the glass cushion sleeve hole.

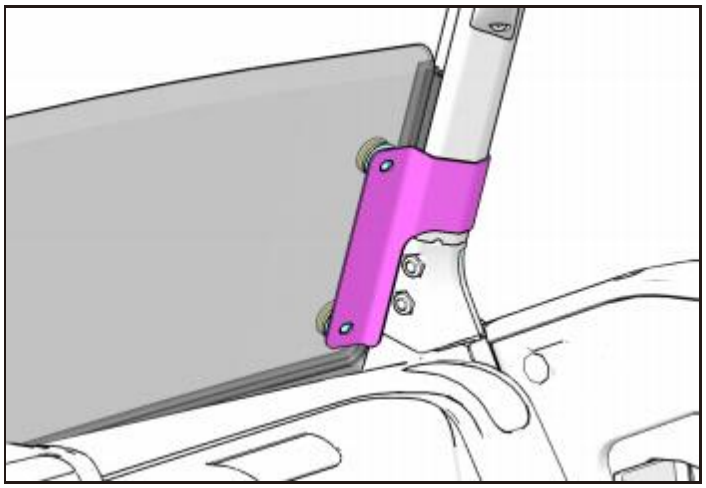

4. Install and secure the half windshield assembly with the holes on the bracket using M8*35 large flat head screws, nuts, and washers. Torque value: 8~15N · m (0.8~1.5kgf · m, 6~11ft · lb);

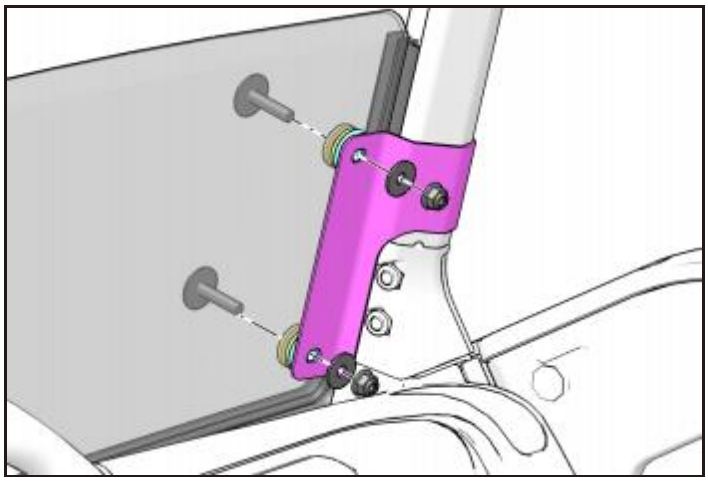

5. Tighten all fixing bolts completely；

Half door net mesh assembly

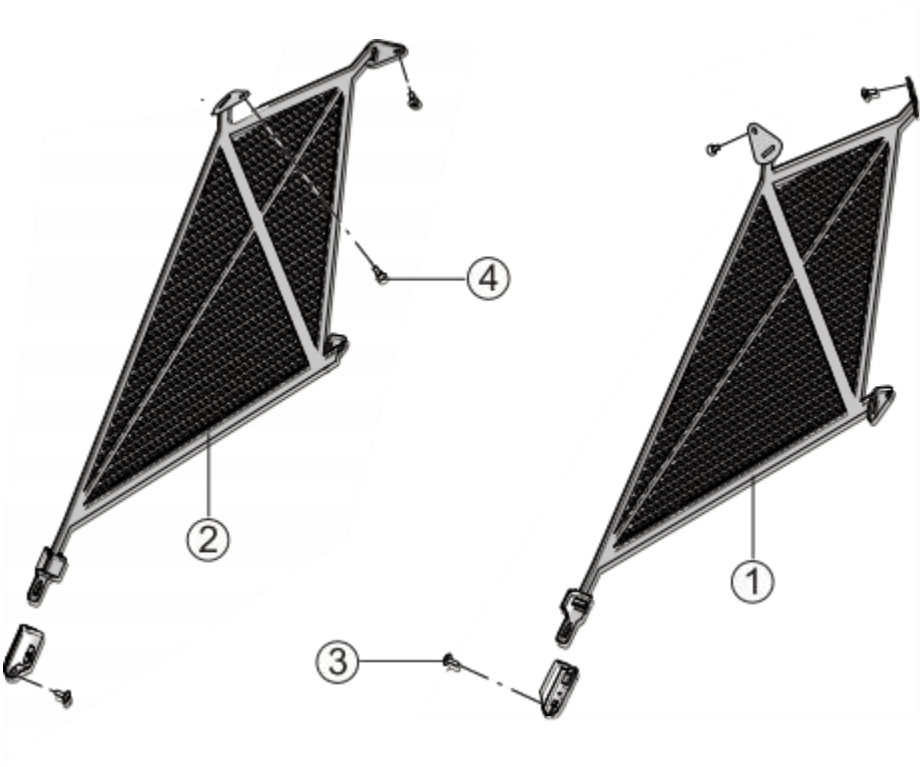

	Parts Name	Parts Number	QTY	Remark
1	LEFT HALF DOOR UPPER CLOTH ASSEMBLY	U0R531000001	1	
2	U01 LEFT HALF DOOR UPPER MESH ASSY	U01R53100001	1	
3	HEXAGON SOCKET LARGE PAN HEAD BOLT M6×16	T03000007002	2	
4	U01 RIGHT HALF DOOR UPPER MESH ASSY	U01R53100002	4	

Half door net mesh assembly installation

TIPS
This mesh is only suitable for half door condition vehicles. The left and right sides are installed in the same way.

1. Align the mesh cloth lock of the half door with the installation groove on the half door, and fix it with bolt M6×16; torque value: 8 ~ 15N m (0.8~1.5kgf m , 6~11ft lb);

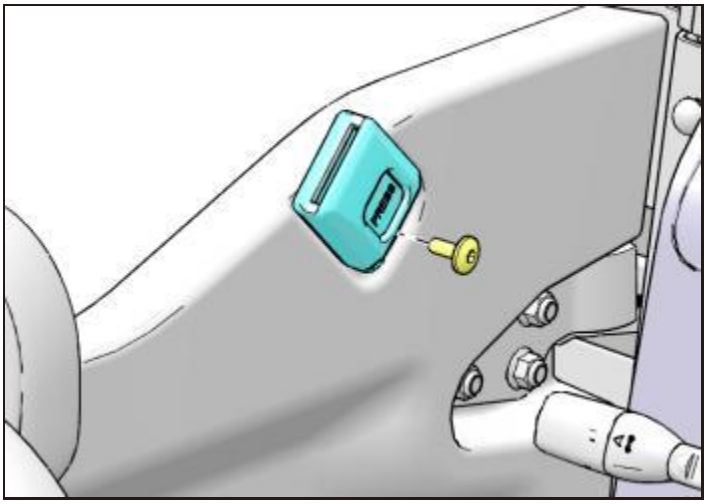

2. Insert the mesh buckle into the mesh lock.

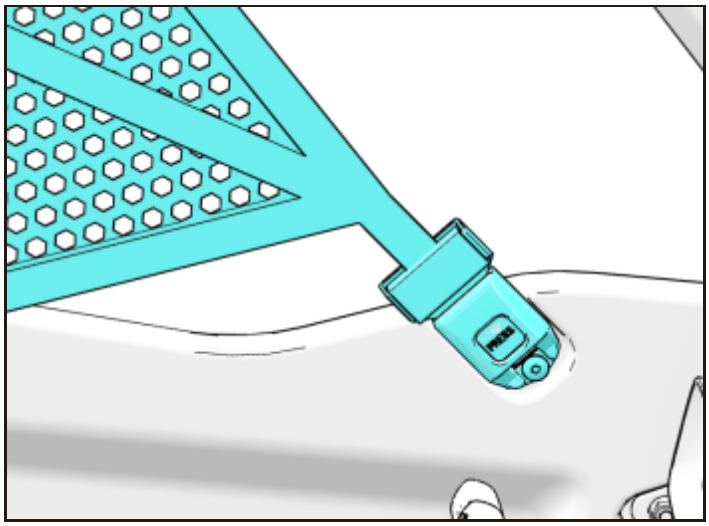

3. Use M6 stepped bolts to install the fixing buckles on the mesh cloth on the corresponding positions of the ceiling, adjust the mesh cloth, and then tighten the bolts. Torque value: 8 ~ 15N m (0.8~1.5kgf m , 6~11ft lb);

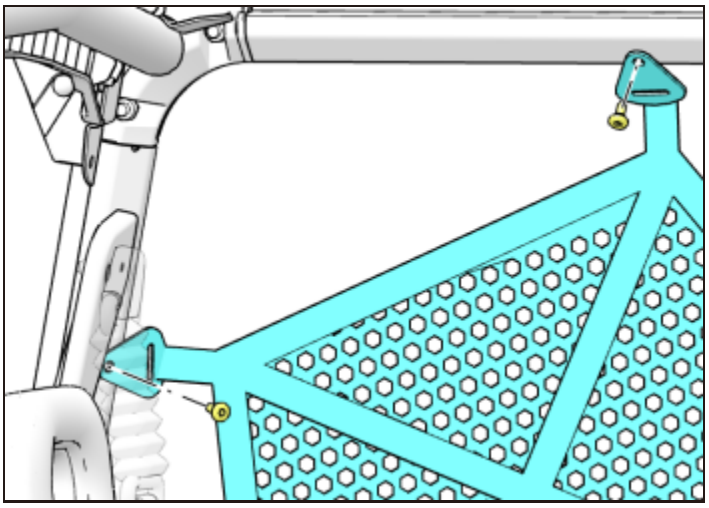

Widened fender assembly

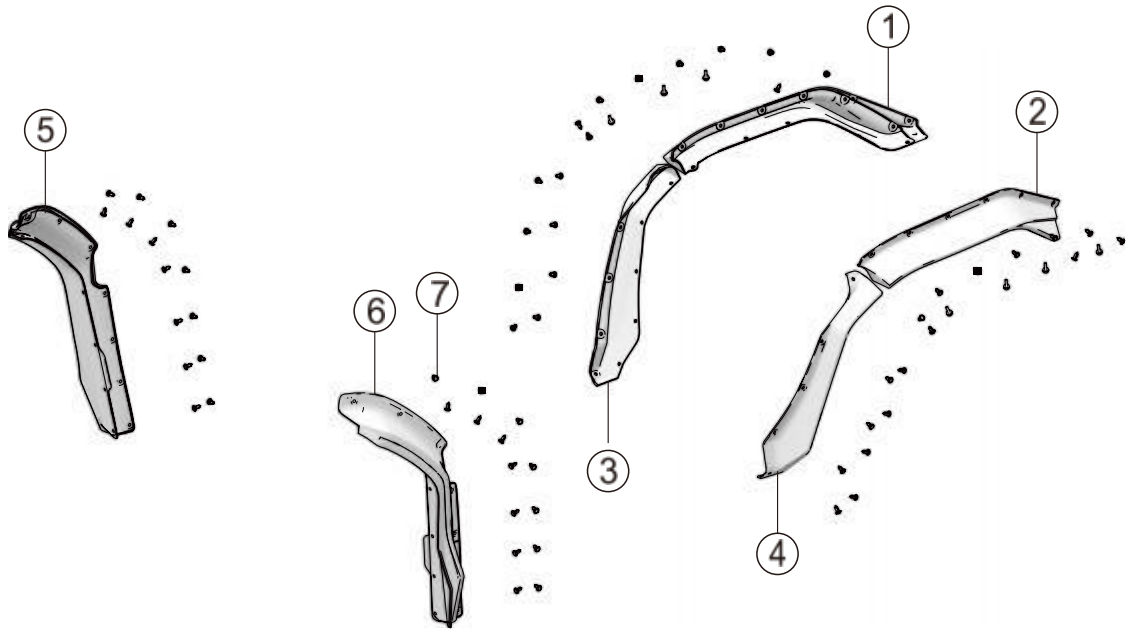

	Parts Name	Parts Number	QTY	Remark
1	U01 RR UPPER WIDENED FENDE PP BLACK	U01H14530001	1	
2	U01 RL UPPER WIDENED FENDE PP BLACK	U01H14430001	4	
3	U01 RR WIDENED FENDE PP BLACK	U01H12414001	4	
4	U01 RL WIDENED FENDE PP BLACK	U01H12314001	1	
5	U01 FR WIDENED FENDE PP BLACK	U01H12240001	4	
6	U01 FL WIDENED FENDE PP BLACK	U01H12150001	4	
7	EXPANSION BUCKLE COMPONENTS	T04000003001	62	

Widened fender assembly installation

TIPS
The left and right sides are installed in the same way.

1. Place the fenders at the appropriate positions of the vehicles to be installed, and mark the positions of the mounting holes of the fenders;

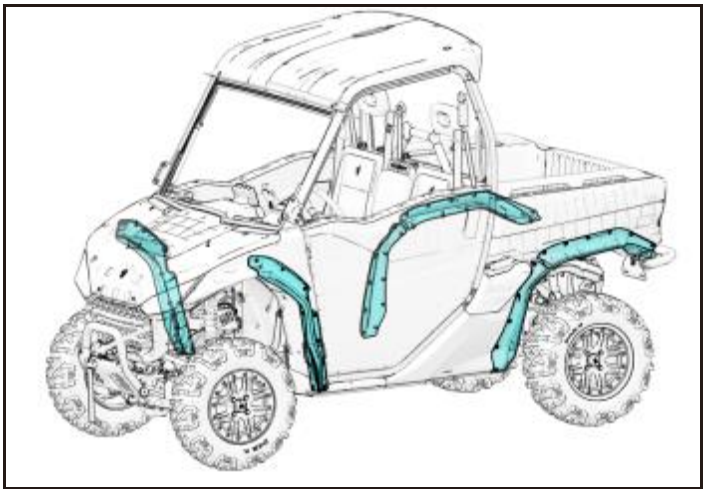

2. Use a suitable tool to drill a ϕ8 hole at the hole installation mark;

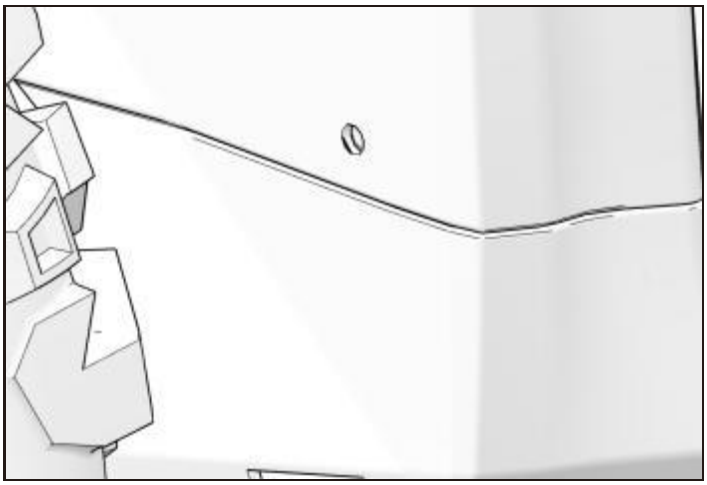

3. Install and fix the fenders one by one with the expansion buckle assembly.

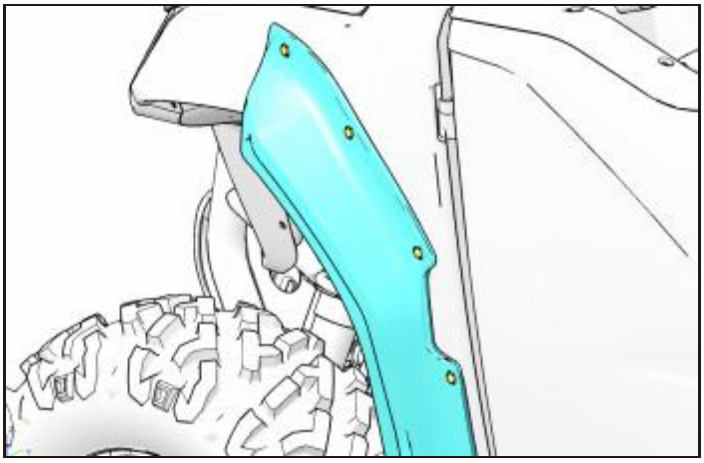

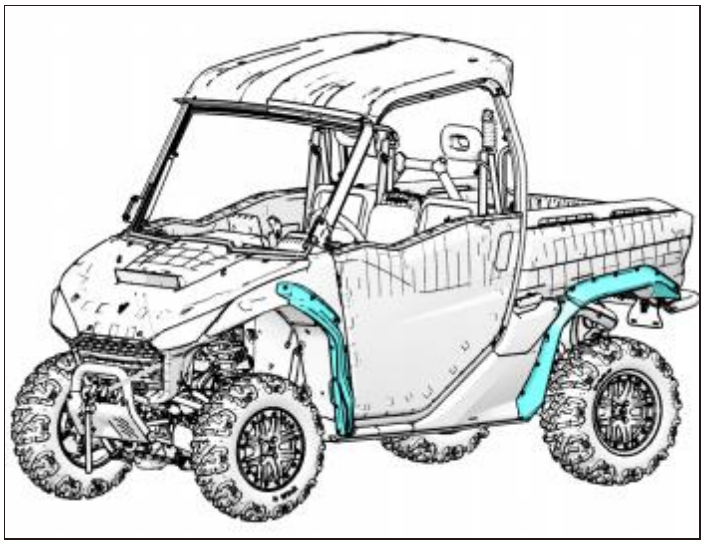

Mirror assembly

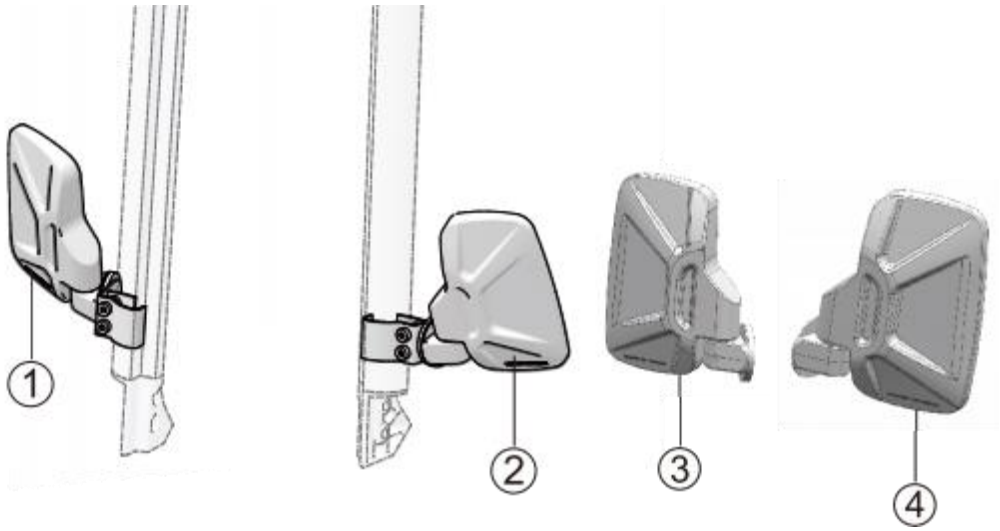

	Parts Name	Parts Number	Amount	Vehicle type
1	RIGHT REARVIEW MIRROR ASSY(EU)	T09000004001	1	
2	LEFT REARVIEW MIRROR ASSY(EU)	T09000003001	1	

Rear mirror installation one(half door state)

1. Clamp the bracket on the rear mirror to the A-pillar. The up and down position can be adjusted according to the driver's height or driving habits. After the position is adjusted, tighten the 2 bolts on the bracket until they cannot be screwed.

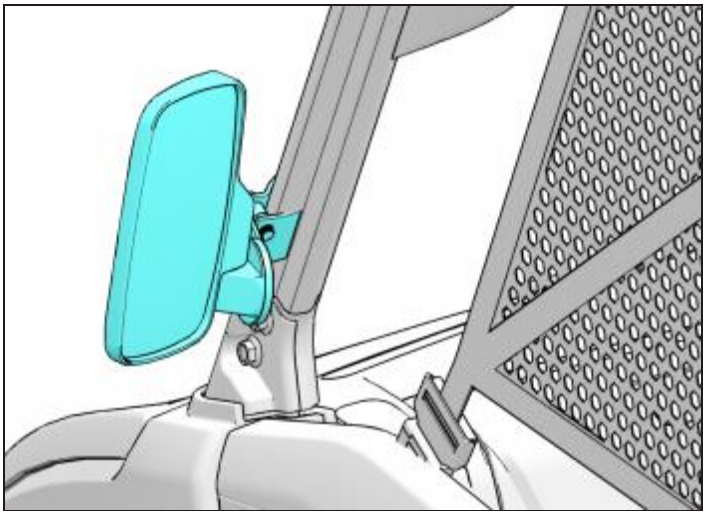

Rear mirror installation two(PC full door state)

1. Take off the bracket on the rear mirror, use bolts to pass through the rear mirror mounting holes reserved in the PC door and fix it.

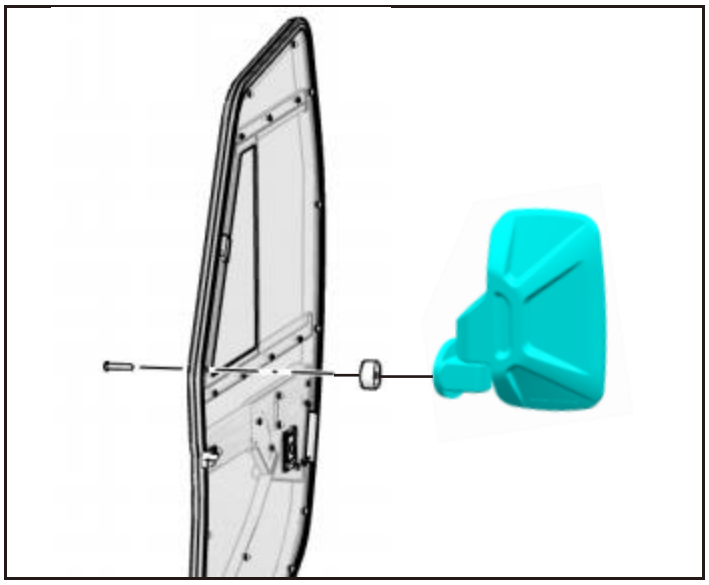

Winch assembly

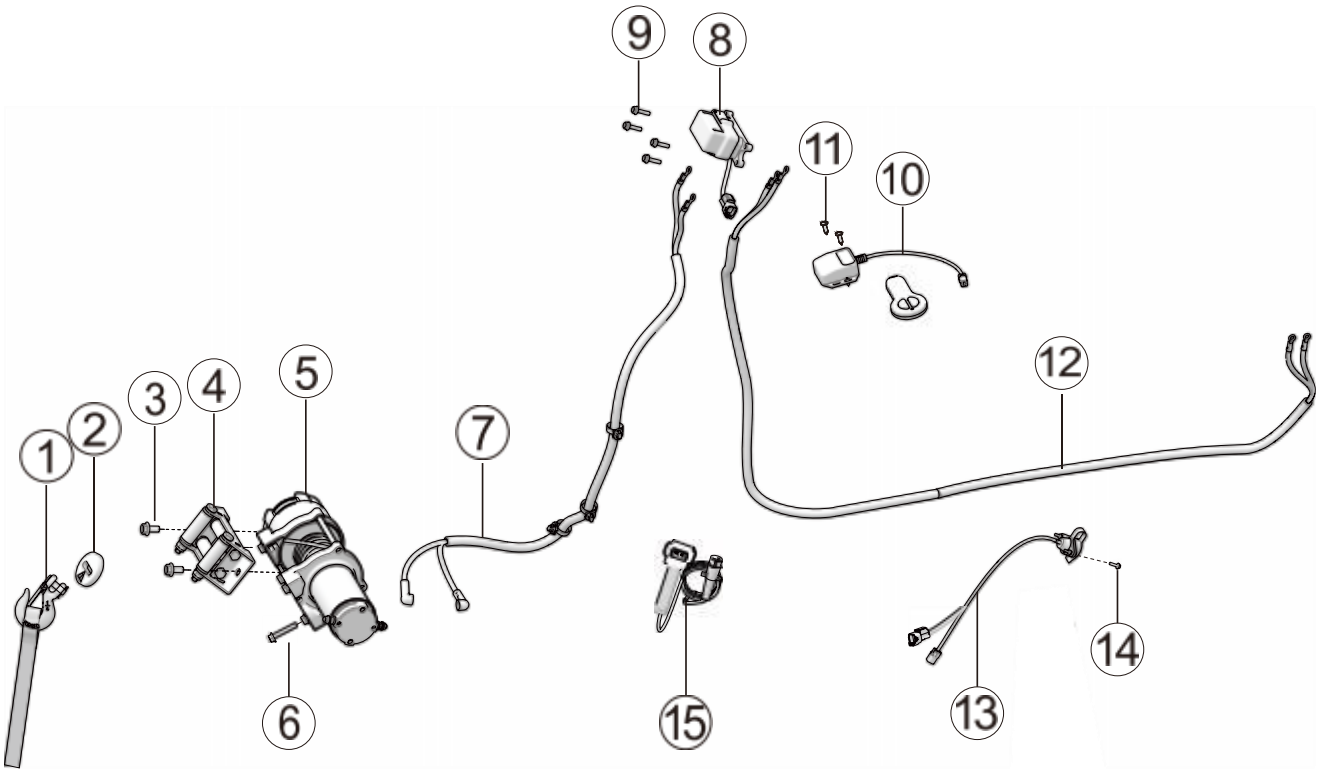

	Parts Name	Parts Number	Amount	Vehicle type
1	U01 WINCH HOOK	U01M05600001	1	
2	U01 WINCH RUBBER PAD	U01M05602001	1	
3	HEXAGON FLANGE BOLT M10×1.25×20	GBT005789025	2	
4	U01 WINCH GUIDE WHEEL	U01M05700001	1	
5	U01 3500LBS WINCH MOTOR	U01M05100001	1	
6	HEXAGON FLANGE BOLT M8×25	GBT005789016	4	
7	U01 WINCH MOTOR LINE	U01M05400001	1	
8	U01 WINCH RELAY	U01M05800001	1	
9	HEXAGON FLANGE BOLT M6×25	GBT005789010	4	
10	U01 WINCH WIRELESS CONTROLLER	U01M05900001	1	
11	SCREW ST4.2×13	GBT000845009	2	
12	U01 WINCH POWER CORD	U01M05500001	1	
13	U01 WINCH SWITCH SOCKET BLACK	U01M05300001	1	
14	HEXAGON FLANGE BOLT M6×25	GBT005789010	2	
15	U01 WINCH SWITCH	U01M05200001		

Schematic diagram of winch installation position

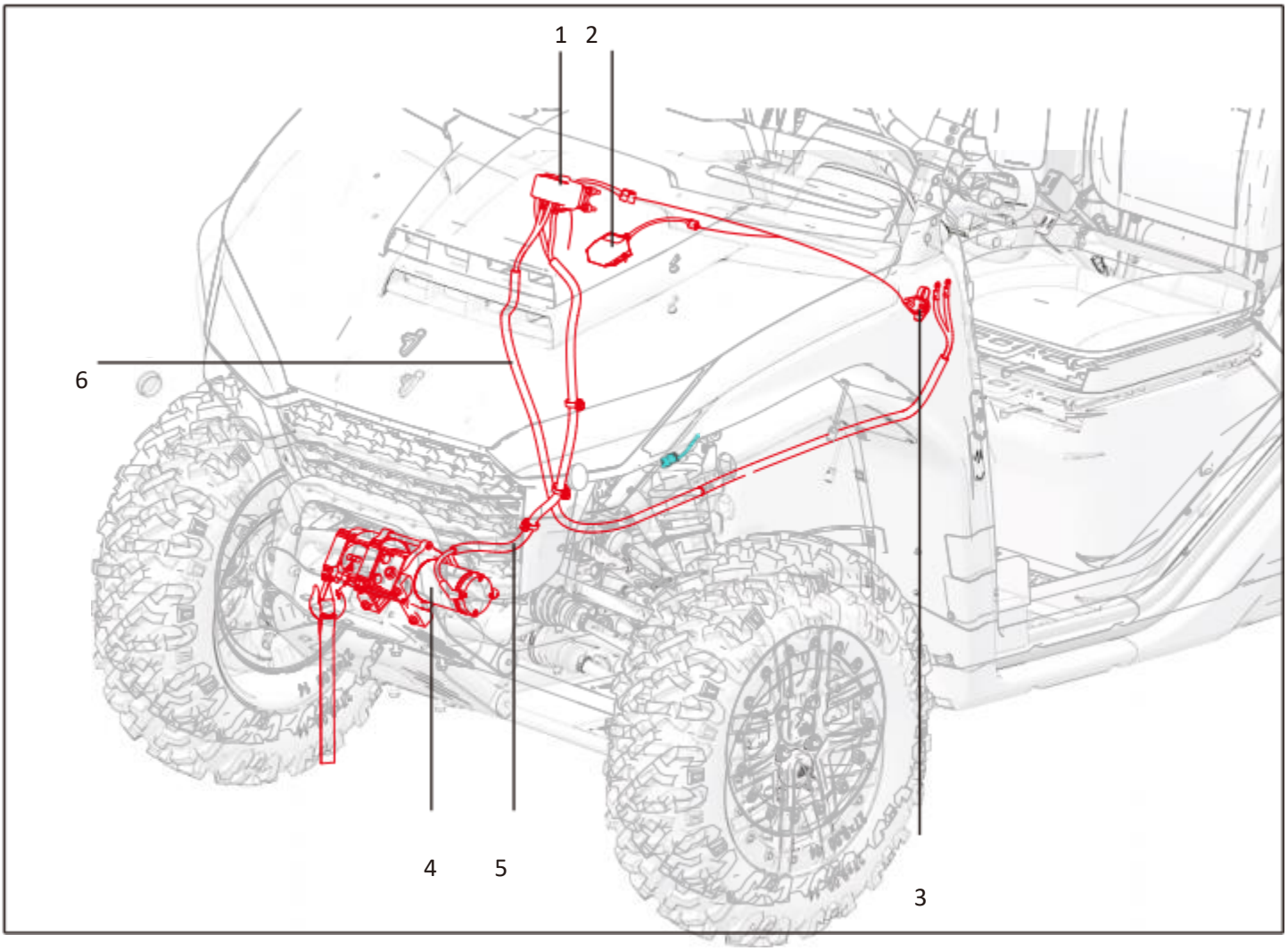

1. Winch Relay: Under Front Access Cover
2. Wireless Control Module: Under Front Access Cover
3. Winch switch socket: right in front of the driver
4. Winch motor: on the front bumper
5. Winch power cable: connect the winch relay and the accumulator (go backward along the main cable when routing)
6. Winch motor wire: connect the winch motor and the winch relay (go forward along the main cable when routing)

Winch installation

1. Remove the front inspection cover.

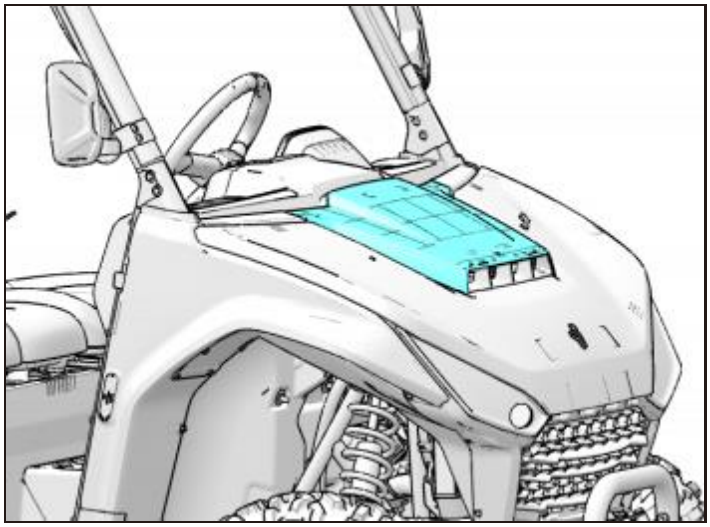

2. Take off the passenger seat cushion assembly and the lower seat cover.

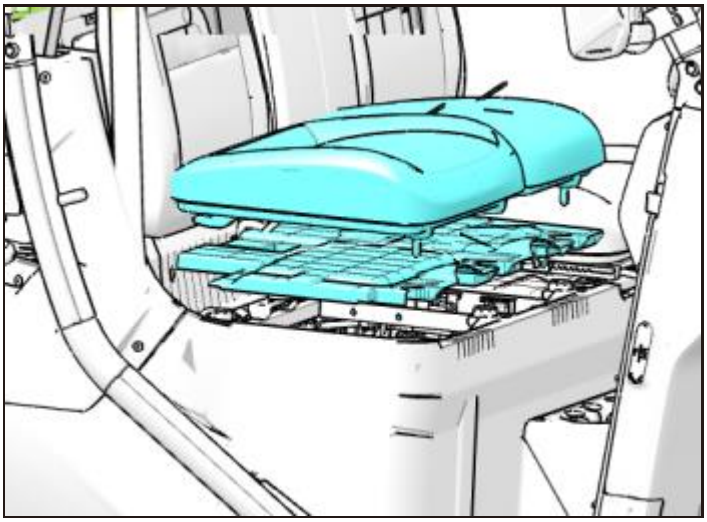

3. Remove the fixing bolts of the center guide cover, and take off the center guide cover to facilitate the arrangement of the winch power cable.

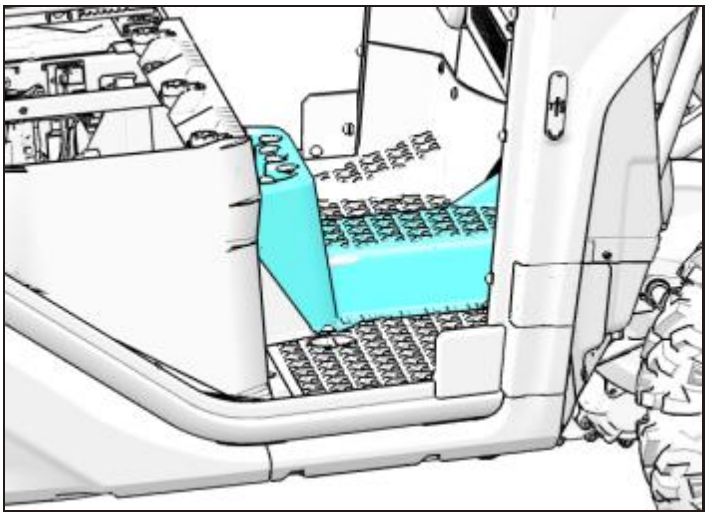

4. Remove the expansion buckle assembly of the dashboard cover, and take off the dashboard cover.

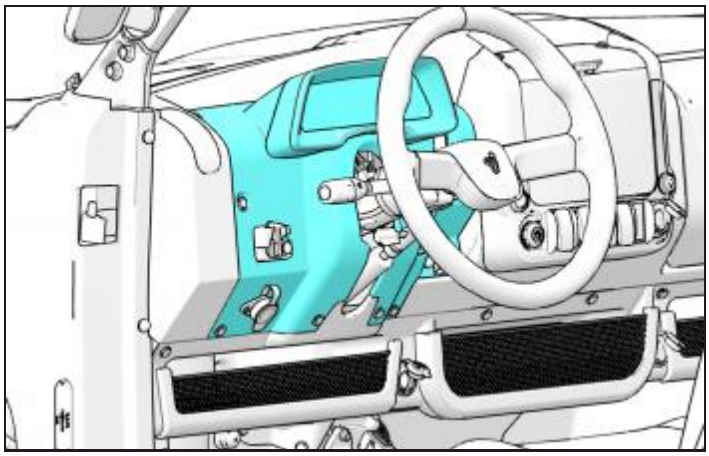

5. Remove the 4 fixing bolts on the front bumper, and take off the front bumper assembly.

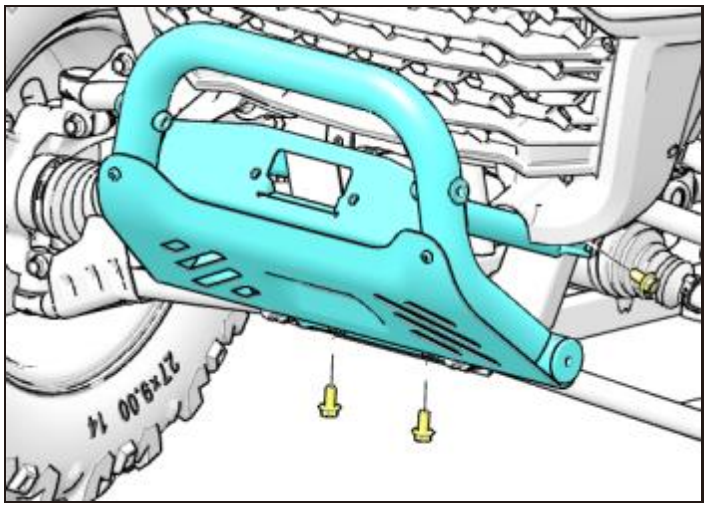

6. Remove the 4 fixing bolts on the front bumper guard assembly, and take the front bumper guard assembly off the front bumper.

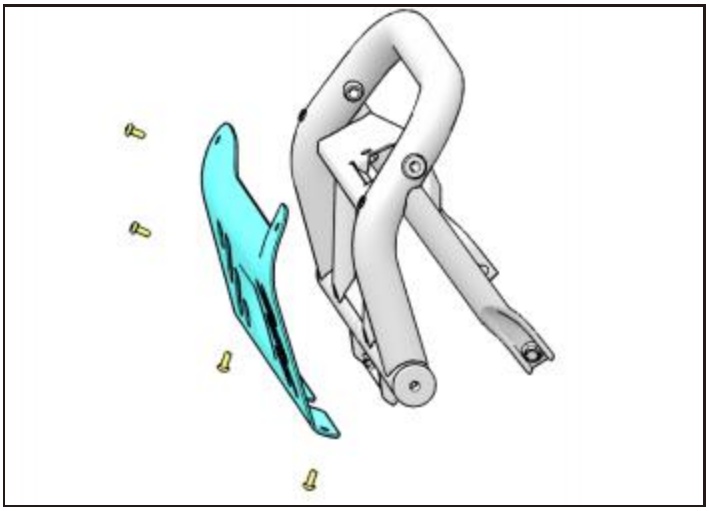

7. Use 4 pieces of bolts M8×25 to fix the capstan motor parts to the corresponding holes of the front bumper.

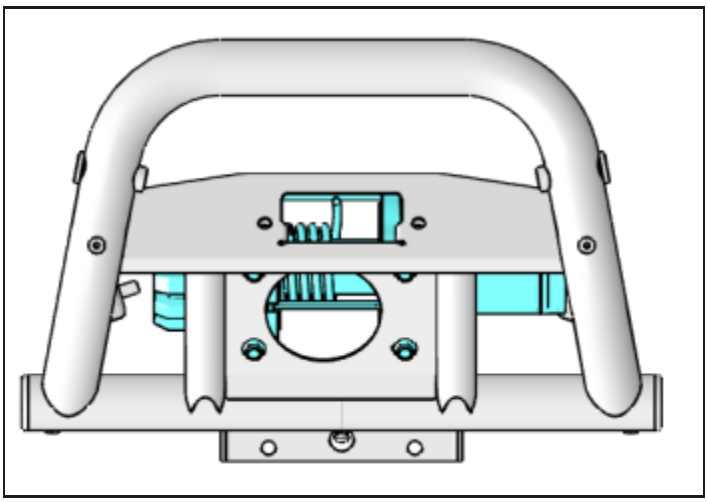

8. Fix the winch guide wheel to the hole corresponding to the front bumper with 2 pieces of bolts M10×1.25×20, and pass the wire rope of the winch motor through the winch direction wheel.

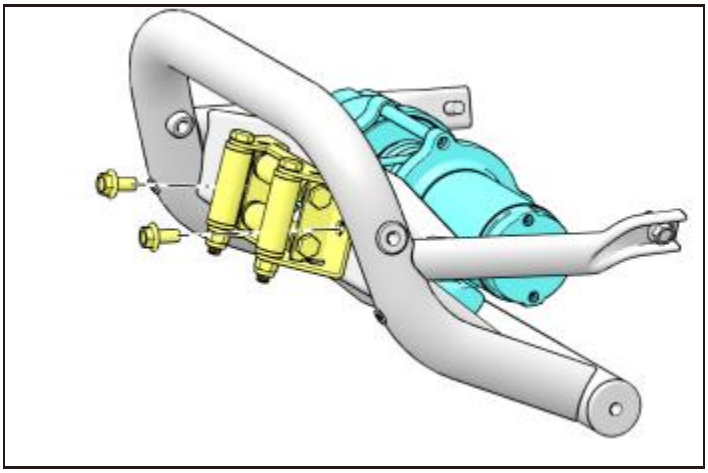

9. Pass the wire rope on the winch motor through the rubber pad of the winch, and finally connect the wire rope to the winch hook.

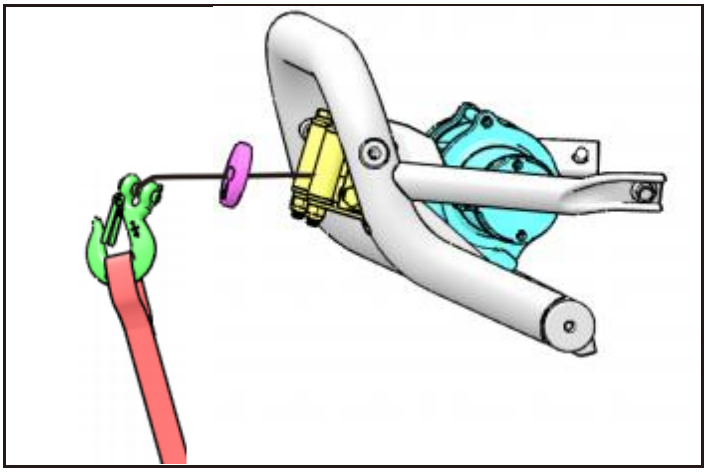

10. Reinstall the bumper with the winch motor installed on the vehicle.

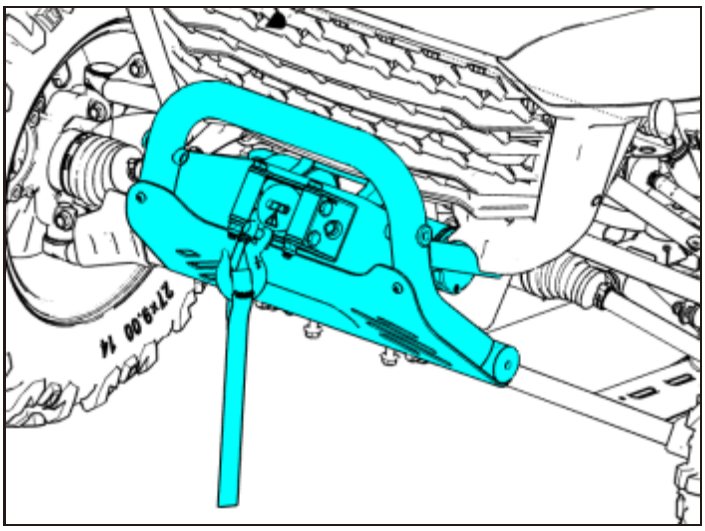

11. Install the winch relay with bolt M6×25 and the winch wireless control module with screw ST4.2×13 at the corresponding positions under the front maintenance cover, as shown in the figure below.

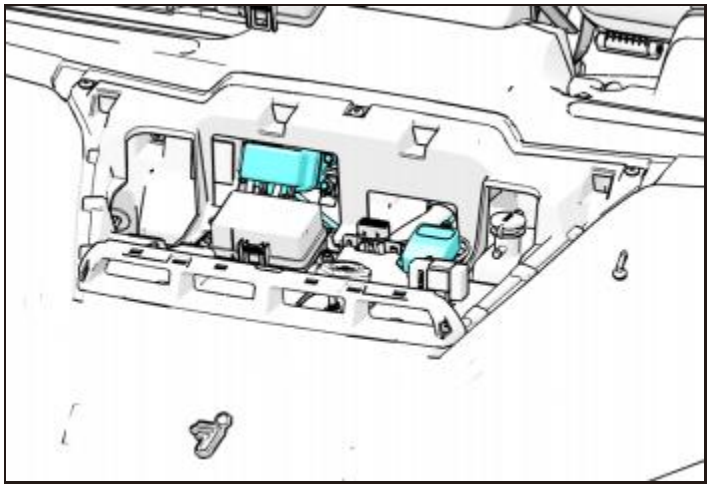

12. Install the winch switch socket on the removed dashboard cover first.

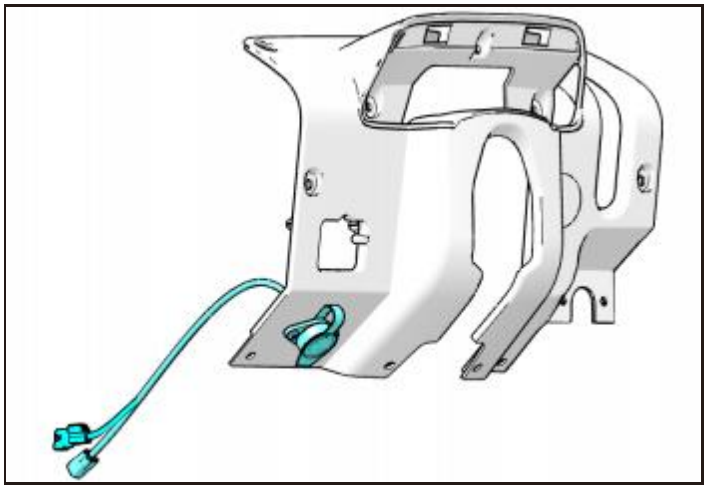

13. Connect the two connectors on the harness of the winch switch socket to the winch relay and the winch wireless control module respectively.

Note: The wiring harness is arranged below the back of the dashboard cover

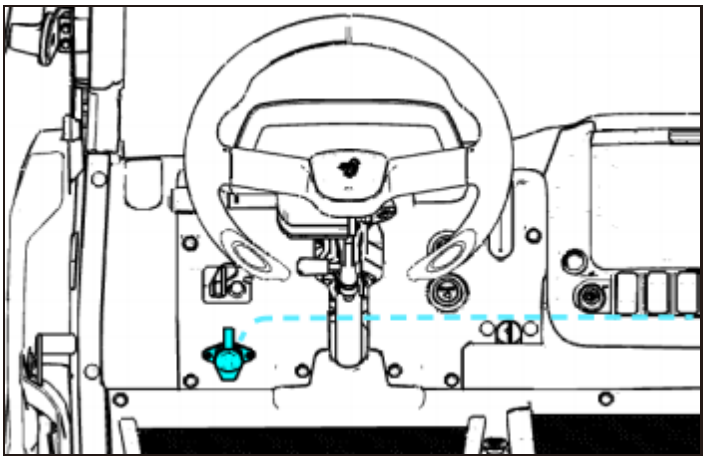

14. Connect a single wire from the winch relay to one end on the main cable.

15. Connect the other end of the winch power cable to the positive and negative terminals under the seat.

Note: The power cable runs in the same direction as the main cable extending backward, and is fixed with cable ties during the routing process. Pay attention to the positive and negative poles during installation.

16. Connect the other end of the winch motor cable to the positive and negative terminals of the winch motor.

Note: The motor line is in the same direction as the main cable at the front and bottom of the car, and is fixed with cable ties during the wiring process. Pay attention to the positive and negative poles when installing.

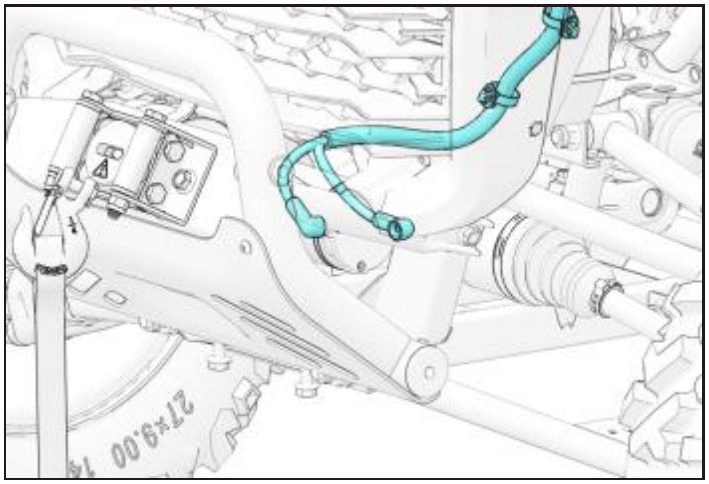

17. After installing and fixing all parts and connecting all connectors, power on the vehicle and test whether the winch is running normally, including switch control, wireless control, etc.

18. If it cannot operate normally, it needs to be checked, whether the connectors are plugged in place, etc.

If it can operate normally, install and restore the removed dashboard cover, front maintenance cover, center guide cover and seat.

High air inlet Assy

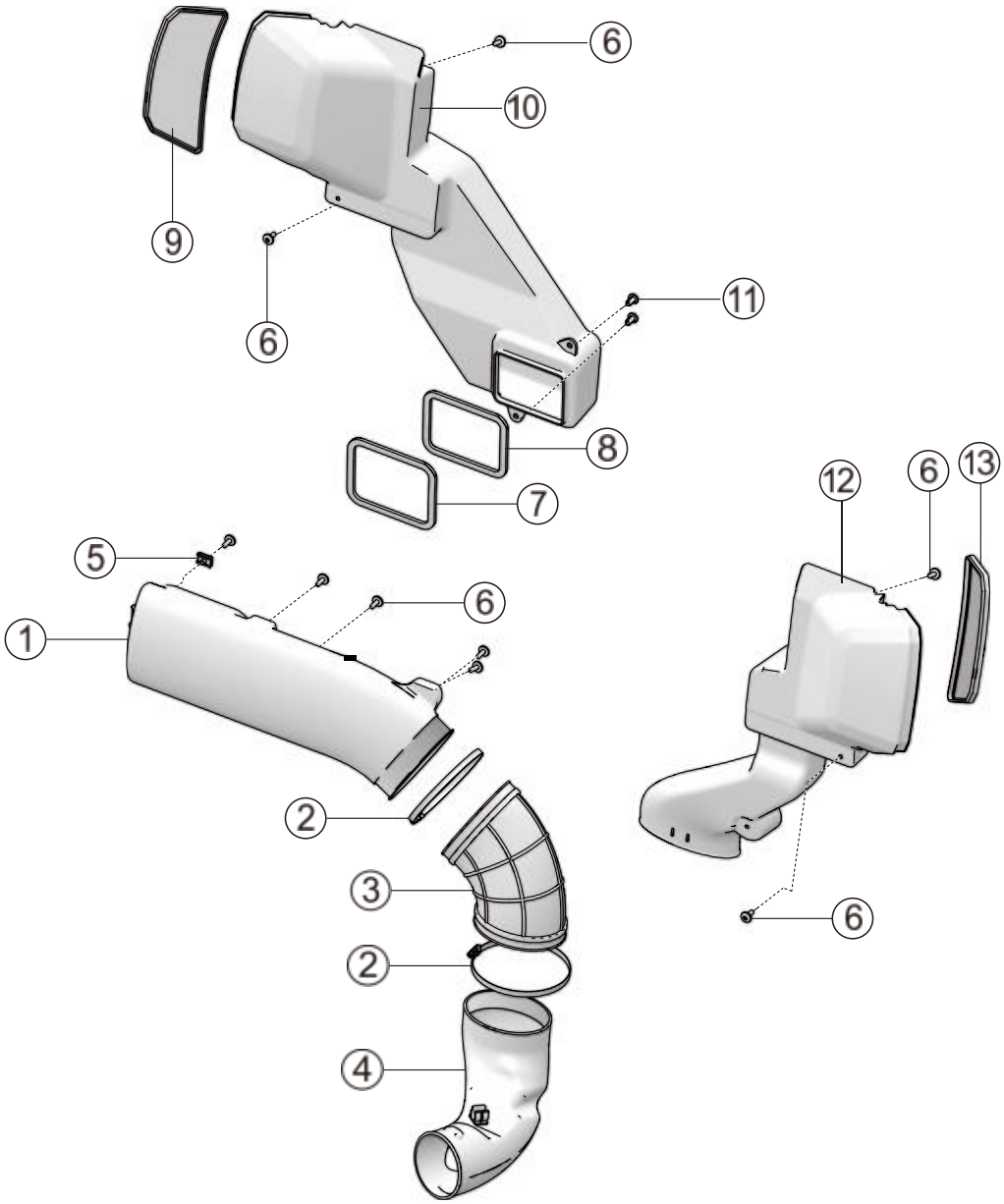

	Parts name	Part number	QTY	Remark
1	CVT AIR INLET PIPE II	U09R76002001	1	
2	A TYPE WORM DRIVE HOSE HOOP 140	QCT000620015	2	
3	CVT AIR INLET PIPE JOINT III	U09R76001001	1	
4	CVT HIGH AIR INLET PIPE I	U09R76007001	1	
5	M6 NUT CLAMP	T04000002001	1	

6	HEXAGON SOCKET LARGE PAN HEAD BOLT M6×16	T03000007002	7	
7	CVT AIR INLET PIPE II SEALING RING	U09R76003001	1	
8	CVT AIR INLET PIPE III SEALING GING	U09R76004001	1	
9	CVT AIR INLET PIPE END CAP	U09R76006001	1	
10	CVT AIR INLET PIPE III	U09R76005001	1	
11	EXPANSION BUCKLE COMPONENTS	T04000003001	2	
12	U09 AIR FILTER INTAKE PIPE	U01R90010001	1	
13	U09 AIR FILTER INTAKE PIPE END COVER	U01R90020001	1	

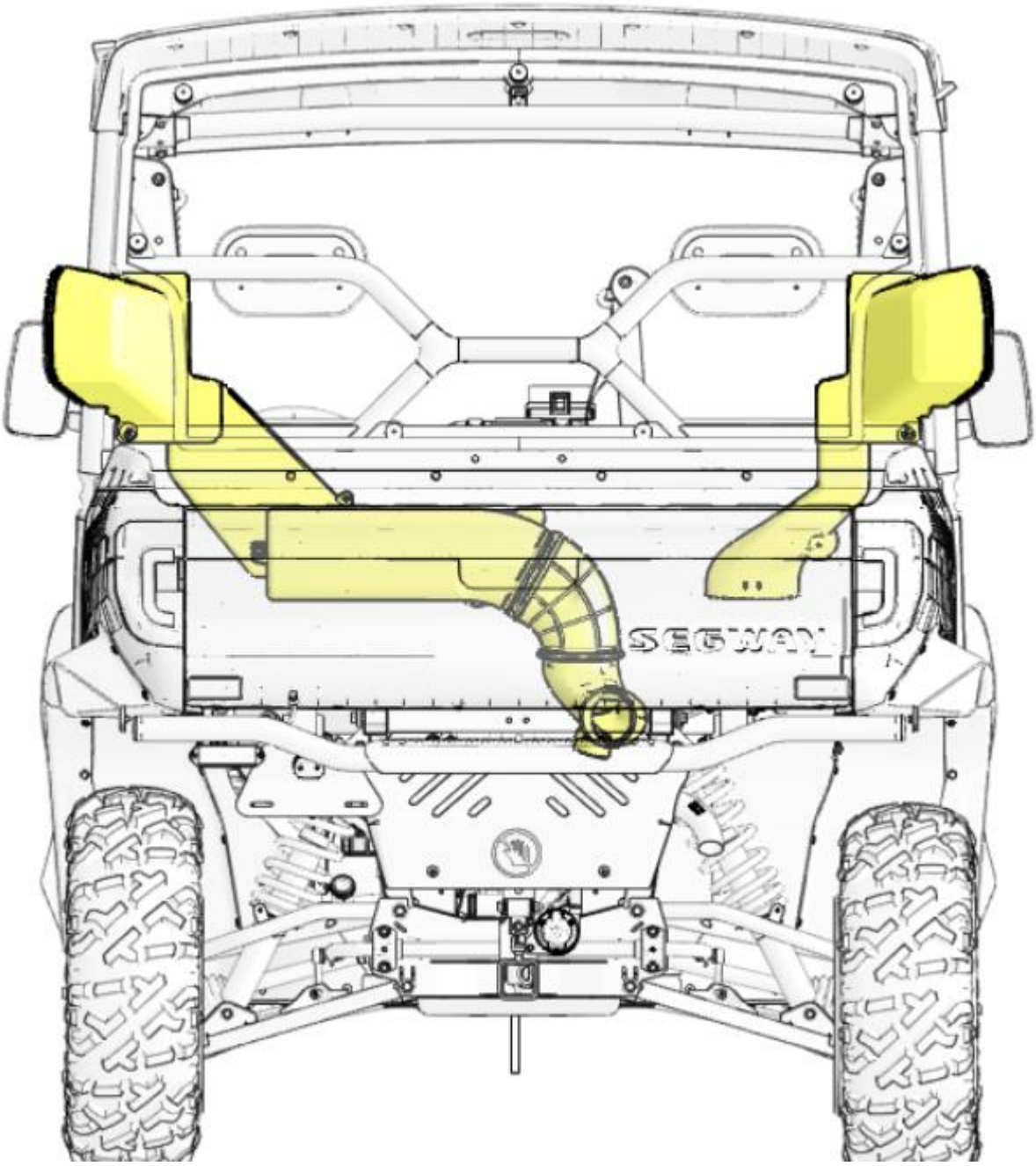

CAUTION
Before installation, the vehicle must be powered off and the engine must be turned off to ensure complete cooling of the vehicle's engine and exhaust system, otherwise skin may be burned due to hot components.

Remove the original intake components

1、Place and open the rear cargo box.

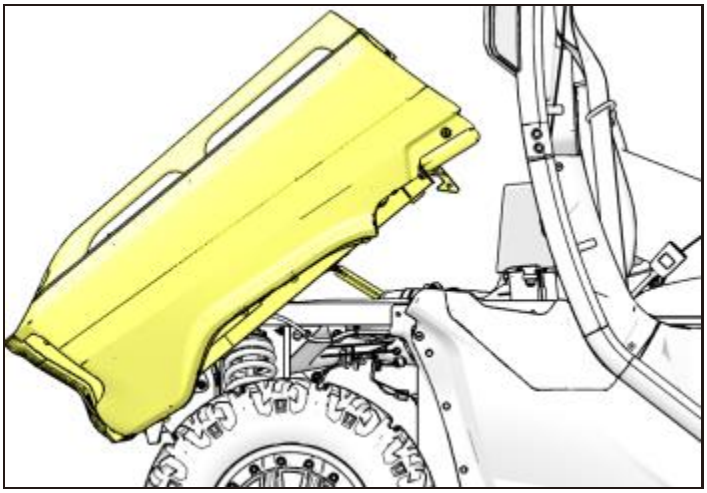

2、Remove the cable on the CVT inlet duct from the card slot.

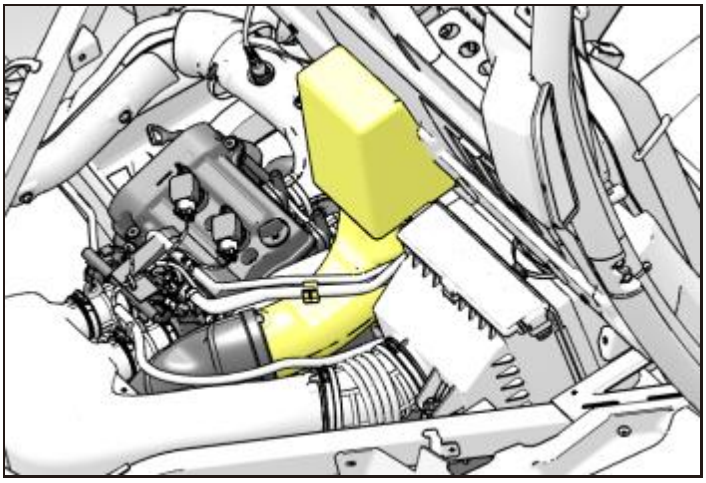

3、Loosen the two clamps connecting the CVT inlet duct to the engine and remove the CVT inlet duct.

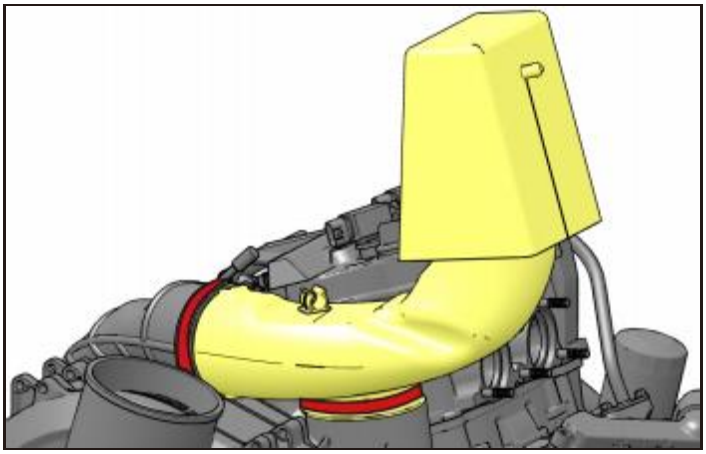

4、Remove all fixing bolts from the cockpit rear panel and remove the cockpit rear panel.

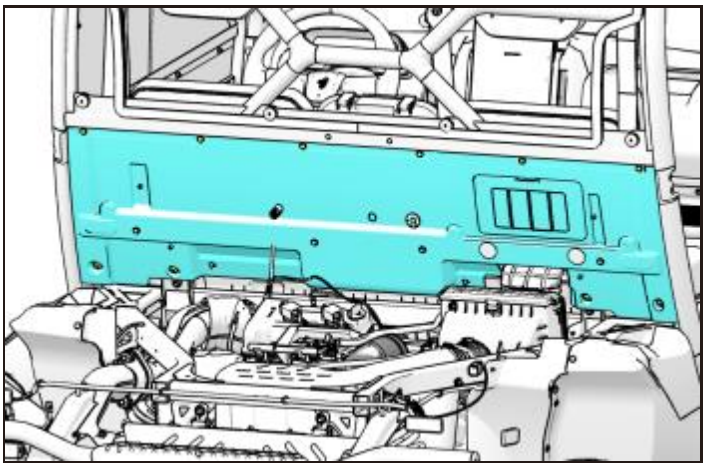

5、Use tools to punch on the rear panel of the cockpit φ 7 holes (as shown in the red circle in the figure below). Cut off the red box area with a tool (there is a cutting mark on the rear panel of the cockpit).

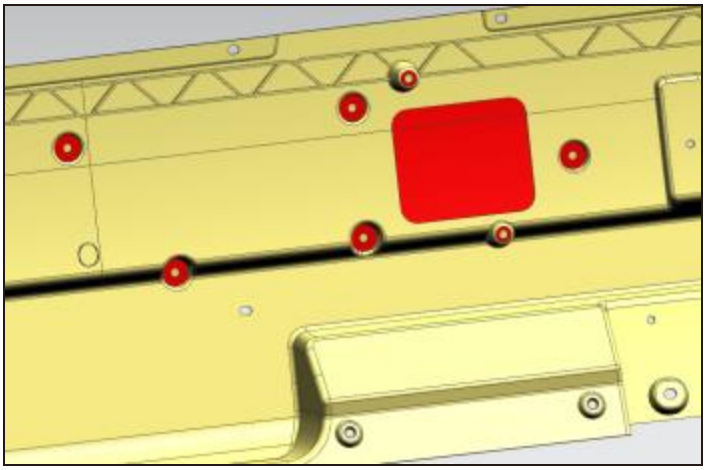

6、Loosen the clamps under the air inlet of the air filter, and the two hexagonal flange bolts M6 × 16 on the left and right sides. Remove and remove the air inlet of the air filter.

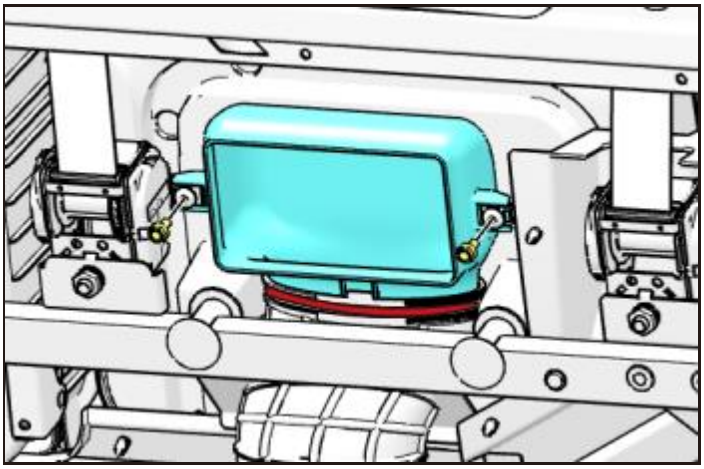

7、Adjust the position of the intake pipe of the air filter to be installed, lock it tightly with the intake hose of the air filter with a clamp, and then fix it with bolts M6*16 above the intake pipe of the air filter.

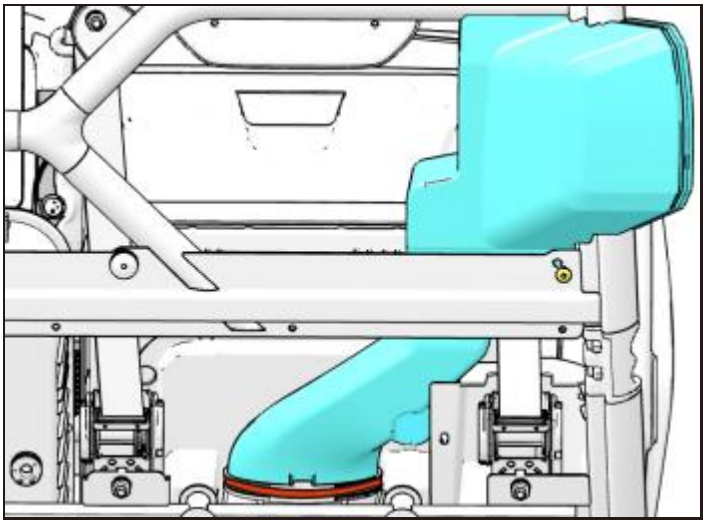

8、Lock the CVT high intake duct I with the intake port on the engine with a clamp.

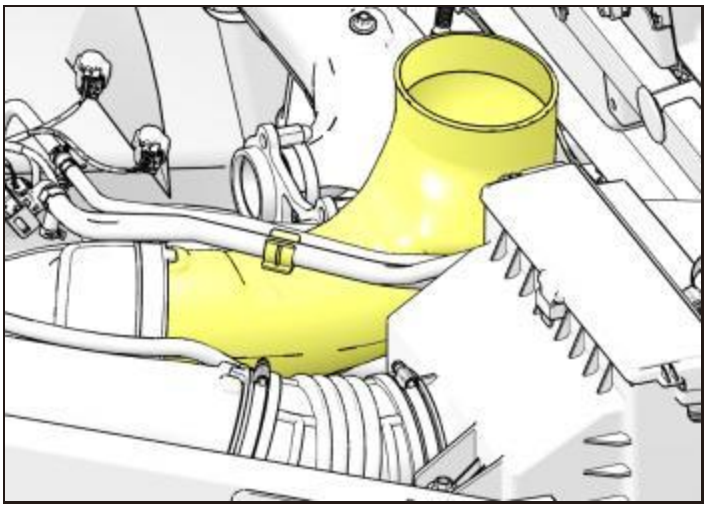

9、Connect CVT inlet duct joint III and CVT inlet duct II to CVT high inlet duct I in sequence

① CVT inlet duct II ② CVT air inlet pipe joint III
③ CVT high inlet duct I

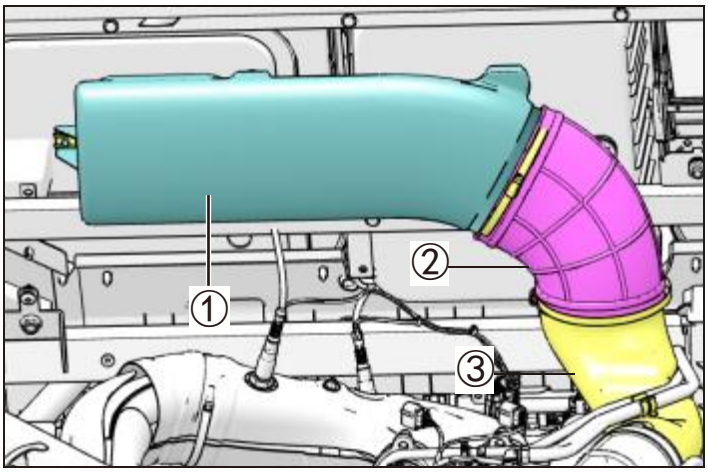

10、Adjust the installation position of the installed air inlet duct and joint

11、Reinstall the drilled and cut cockpit rear panel with the previously removed bolts.

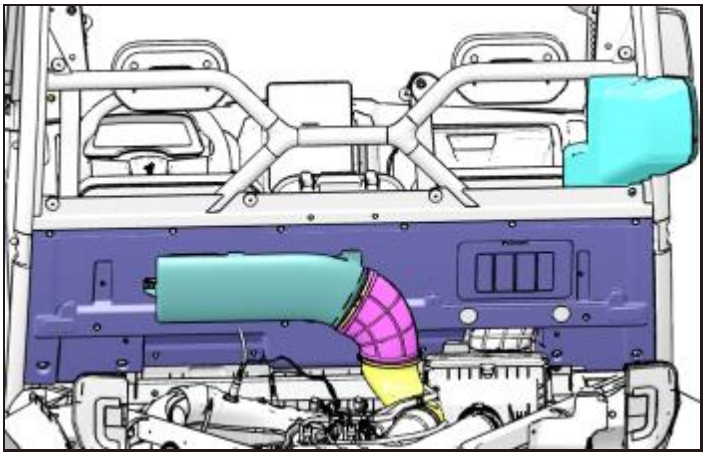

12、Use 5 large pan head hexagonal bolts M6 × 16. Fix the CVT inlet duct II.

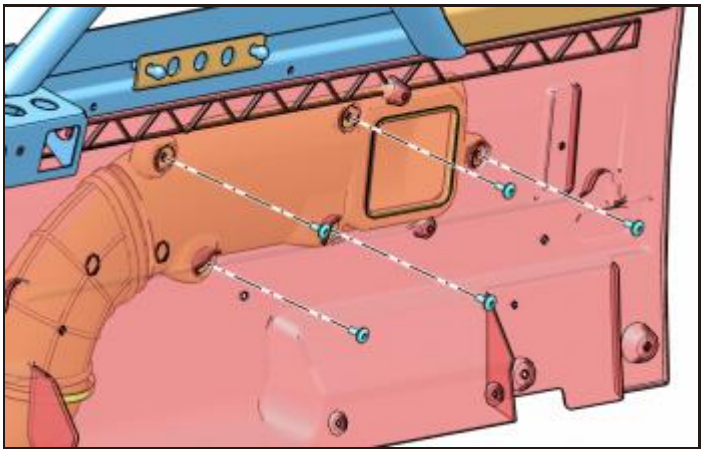

13、Place CVT inlet duct III in a suitable position and connect it to CVT inlet duct II. During the connection, place the CVT inlet duct III sealing ring and CVT inlet duct II sealing ring in the middle according to the "Sealing Ring Installation Diagram" sequence.

① CVT inlet duct III ②CVT inlet duct sealing ring III
③CVT inlet duct II sealing ring

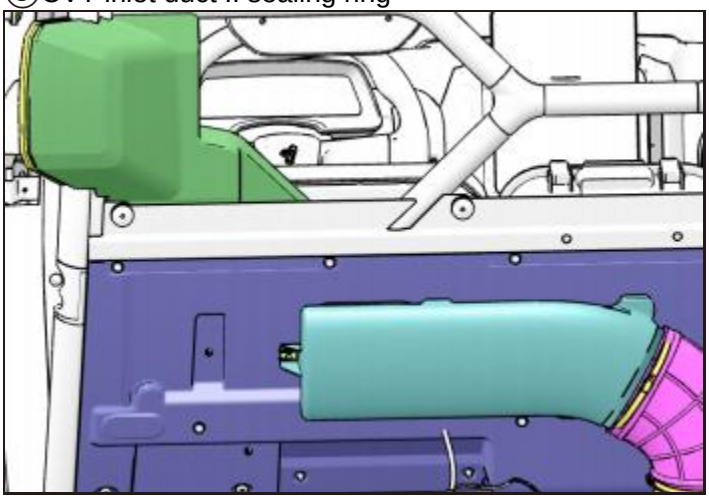

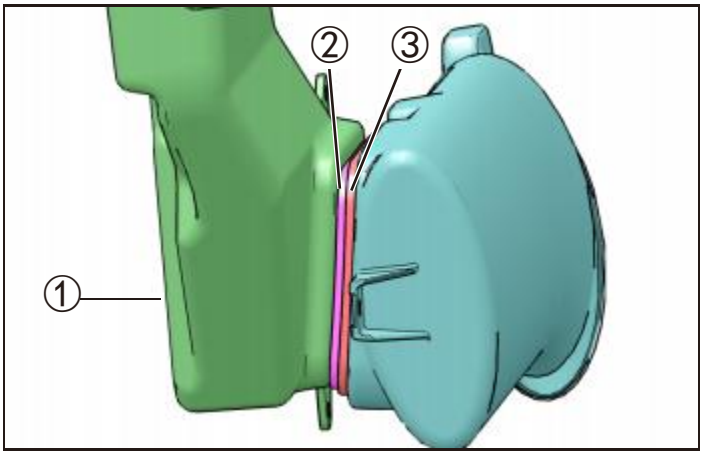

14、Fix the CVT inlet duct III with 2 expansion buckle components.

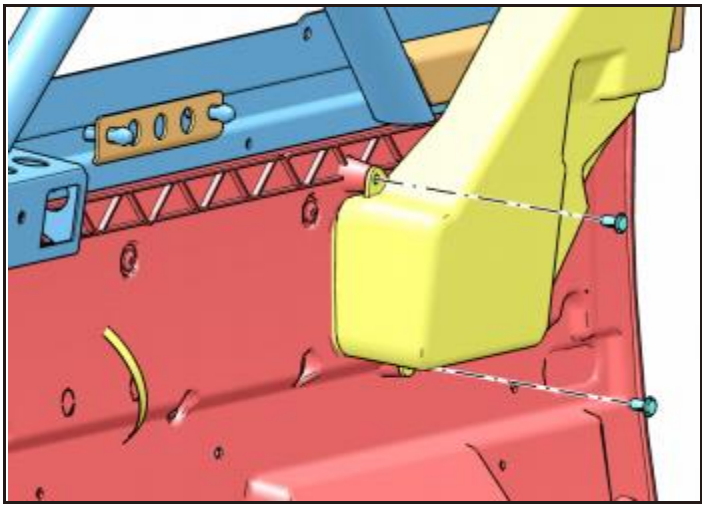

15、Use large pan head hexagonal bolt M6 × Fix the CVT inlet duct III and the air filter inlet duct at the corresponding holes on the right bracket of the rear quarter panel.

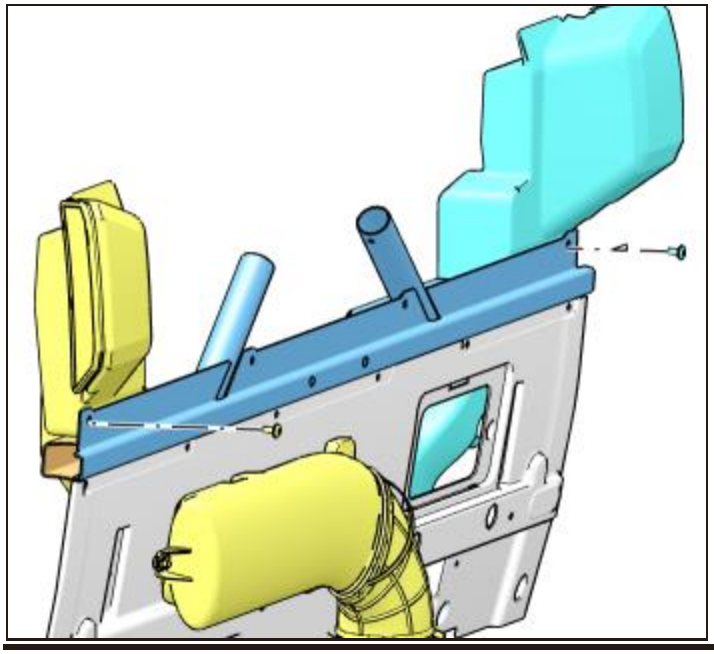

16、Use large pan head hexagonal bolt M6 × 16. Fix the CVT inlet duct III and the air filter inlet duct onto the corresponding brackets on the ceiling.

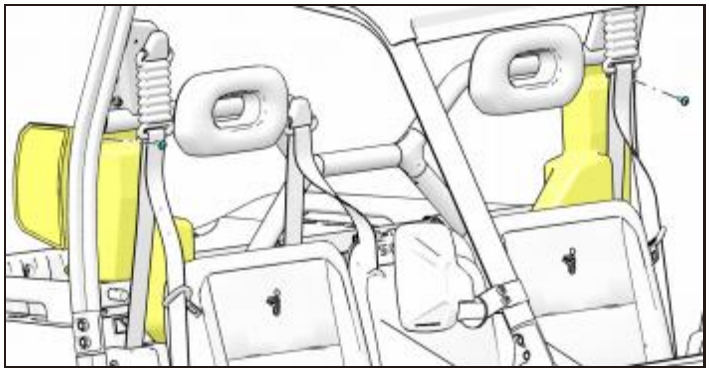

17、Install the end cover of the CVT inlet duct on the CVT inlet duct III, and the end cover of the air filter inlet duct on the air filter inlet duct.

18、Start the vehicle and test whether the high air intake system can operate normally.

Lower storage grid net pocket assembly

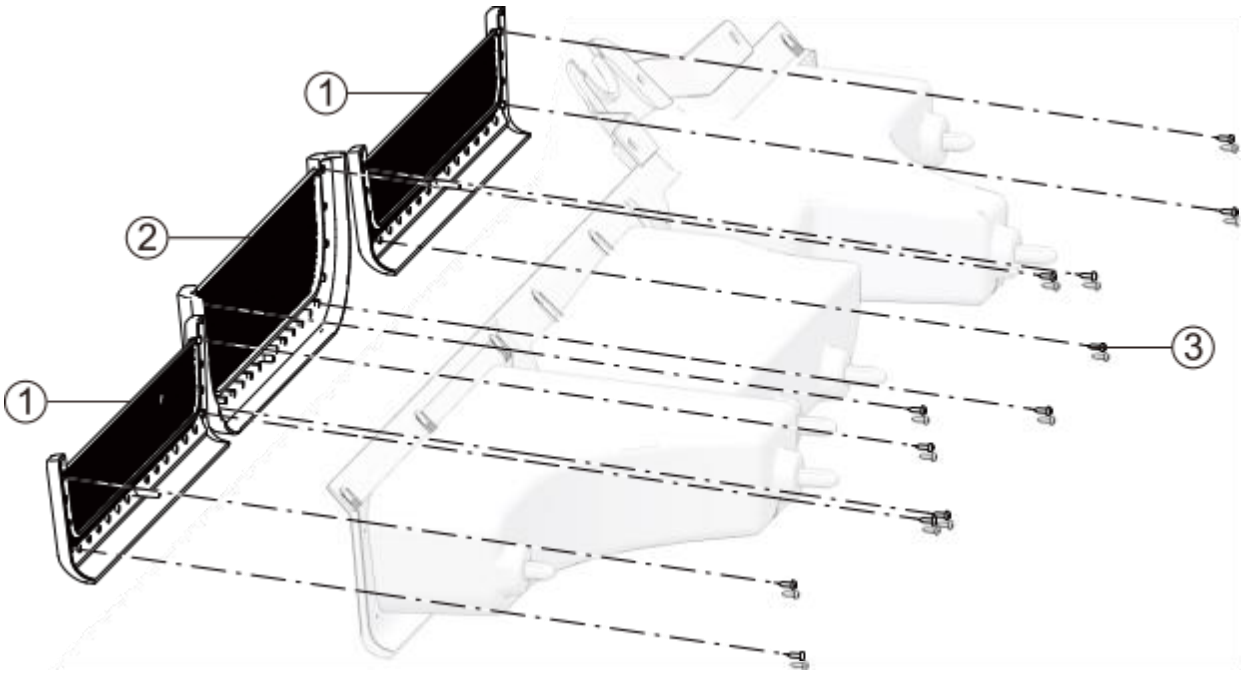

	Parts Name	Parts Number	QTY	Remark
1	U01 SIDE NET POCKET WITH LOWER STORAGE G	U01H21211001	2	
2	U01 MEDIUM NET POCKET WITH LOWER STORAGE	U01H21212001	1	
3	SCREW ST2.9×9.5	GBT000845004	12	

Lower storage grid net pocket assembly installation

1. Remove the 10 expansion buckle assembly on the storage under the central control;

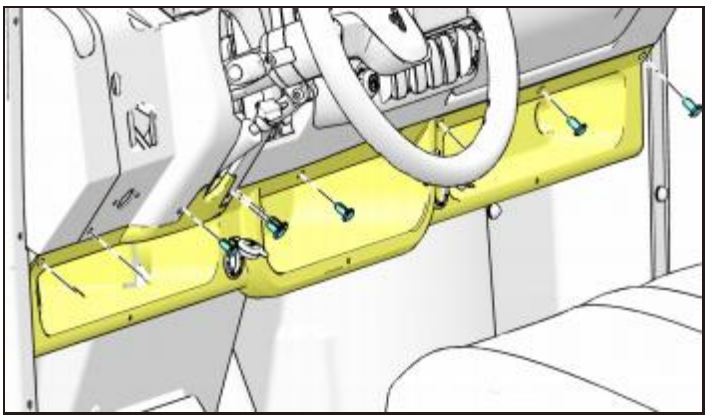

2. Buckle the bottom of the lower storage of the central control, move it forward with force, pull out the buckle at the rear of the lower storage of the central control from the fixing hole, and release the storage. Pull out the plug behind the 12V power output socket, and remove the storage.

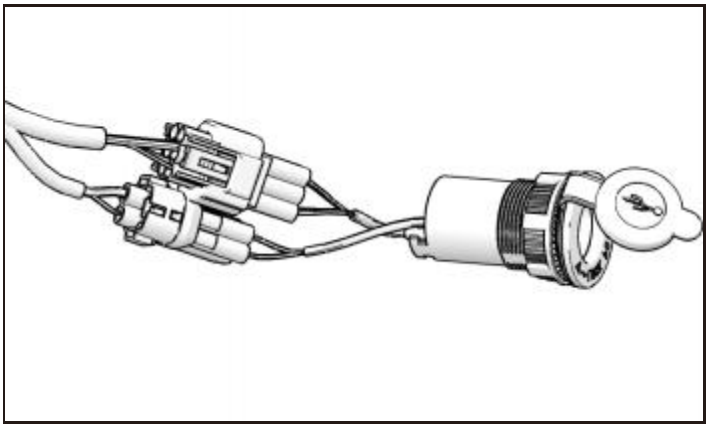

3. Fix the three net pockets on the lower storage of the center console with screws ST2.9×9.5.

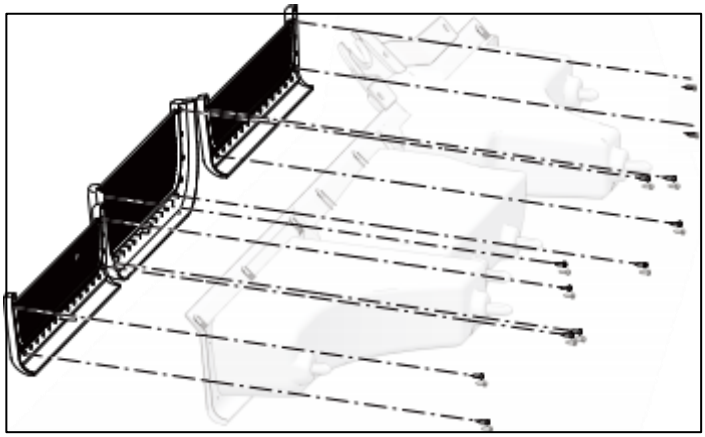

4. Reconnect the plug of the 12V power output socket.

5. Re-fix the storage under the central control with 10 expansion buckle assembly.

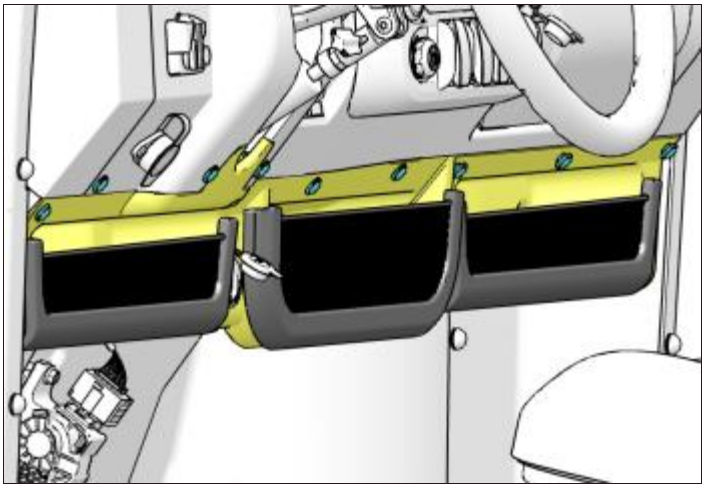

Vehicle aluminum armor assembly

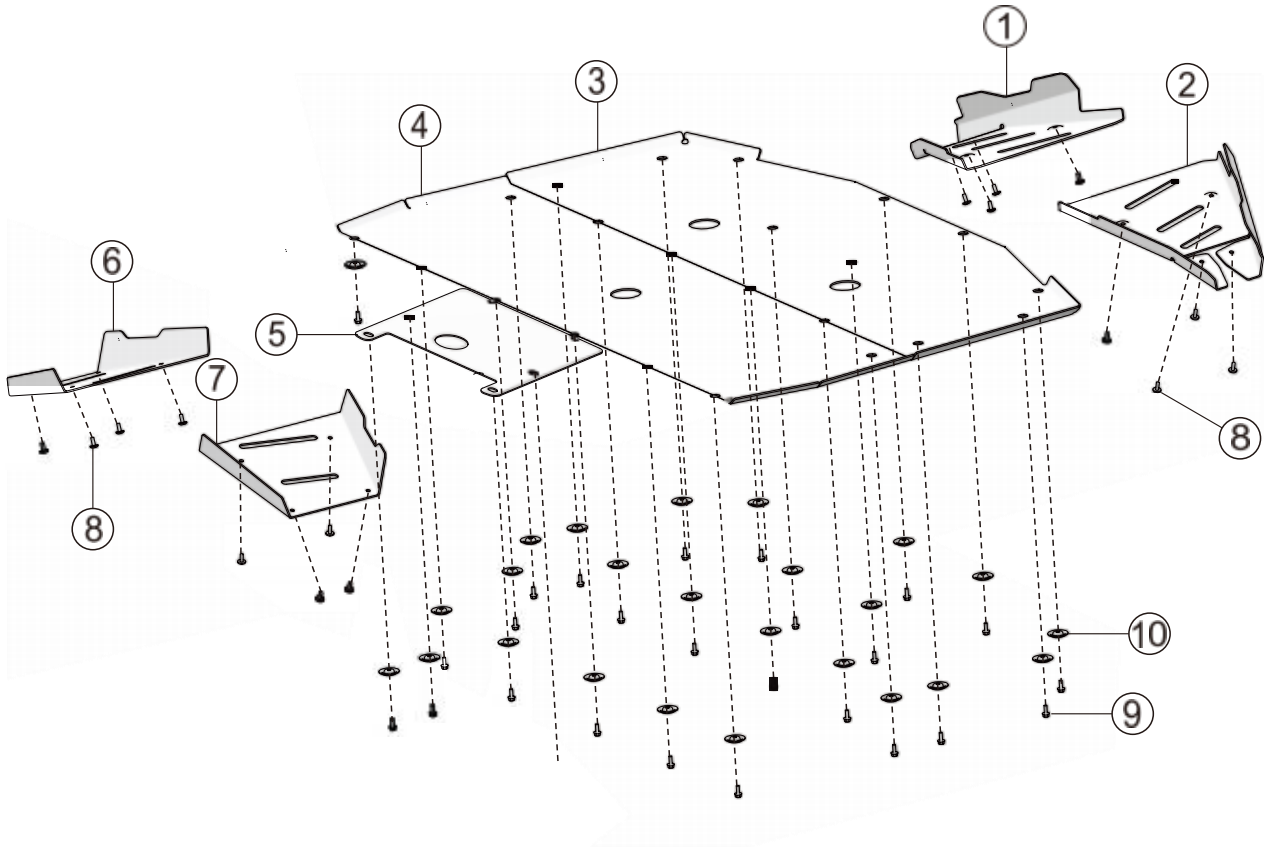

	Parts Name	Parts Number	Amount	Vehicle Type
1	U01 LR LOWER ROCKET ARM GUARD (AL)	U01R10005001	1	
2	U01 RF LOWER ROCKET ARM GUARD (AL)	U01R10006001	1	
3	U01 LOWER FRONT GUARD (AL)	U01R10002001	1	
4	U01 LOWER MID GUARD (AL)	U01R10003001	1	
5	CHASSIS REAR GUARD	U09-R105001-0H1-00	1	
6	U01 LR LOWER ROCKET ARM GUARD (AL)	U01R10008001	1	
7	U01 RR LOWER ROCKET ARM GUARD (AL)	U01R10009001	1	
8	HEXAGON SOCKET LARGE PAN HEAD BOLT M6×16	T03000007002	16	
9	HEXAGON FLANGE BOLT M6×16	GBT005789007	26	
10	U01 WASHER	U01R10001001	26	

Removal of original vehicle bottom guard plate

Remove the existing under panels from the vehicle before installing the new under panels.

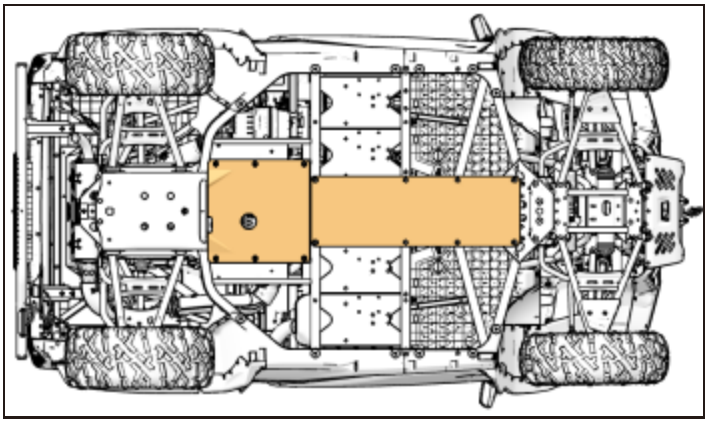

TIPS
There is no order of removal

1. Remove the fasteners on the guard plate to be replaced one by one, and take off the bottom guard plate.

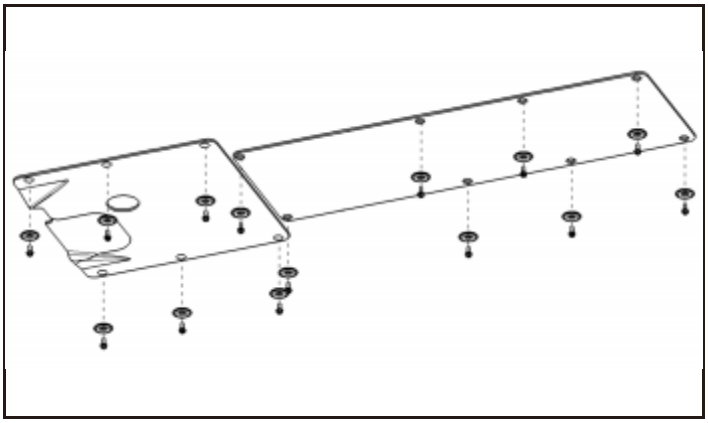

Bottom guard installation

1. Fix the new front and rear rocker bottom guards with bolts M6×16, torque: 8~12N m (0.8~1.2kgf m , 69~103.6in lb)

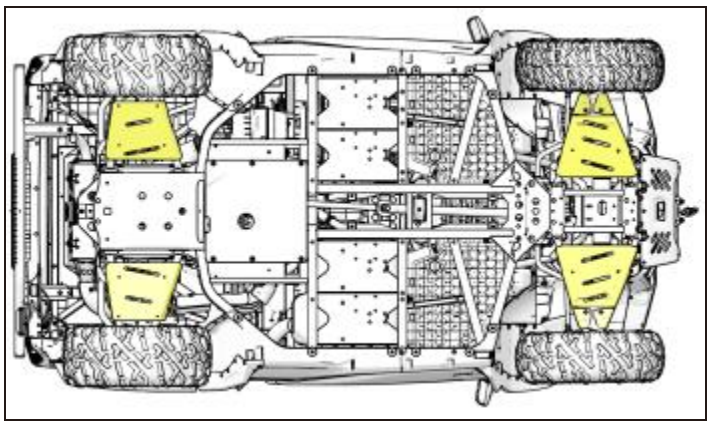

2. Fix the front, middle, and rear guard plates of the new chassis with bolts M6×16 and washers, torque value: 8~12N m (0.8~1.2kgf m, 69~103.6in lb).

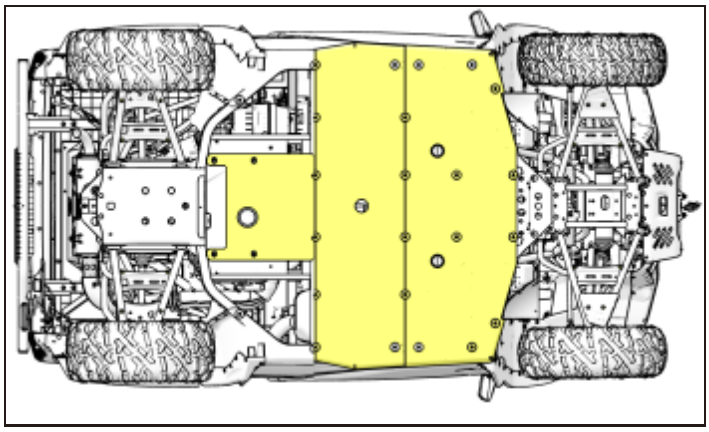

TIPS
There is no order of installation

Vehicle rear bumper assembly installation (LOF version)

TIPS
Complete the assembly of the rear fender on the bumper first, and then install the assembled rear bumper assembly on the vehicle.

1. Remove the 4 M5 nuts that fix the fog lights and the reversing lights respectively.

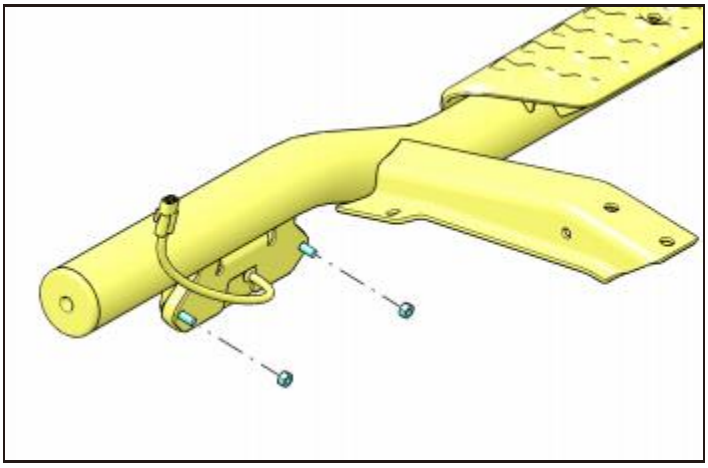

2. Fix the LOF rear fender mounting bracket to the fog lamp (reversing light) mounting bracket with 2 M5 nuts.

TIPS
The 2 pieces of fender brackets are the same, pay attention to the installation direction when installing the brackets.

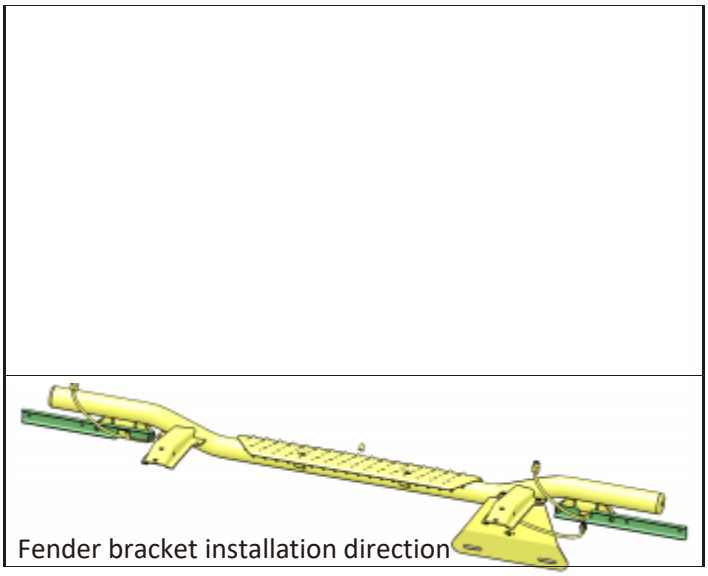

3. Use the right (left) rear fender is installed on the fender mounting bracket with a bolt M6×16 and a nut M6. Torque: 6~8.8 ft.lbs (8~12N m).

TIPS
The rear fender is divided into left and right sides, please pay attention to distinguish them when installing.

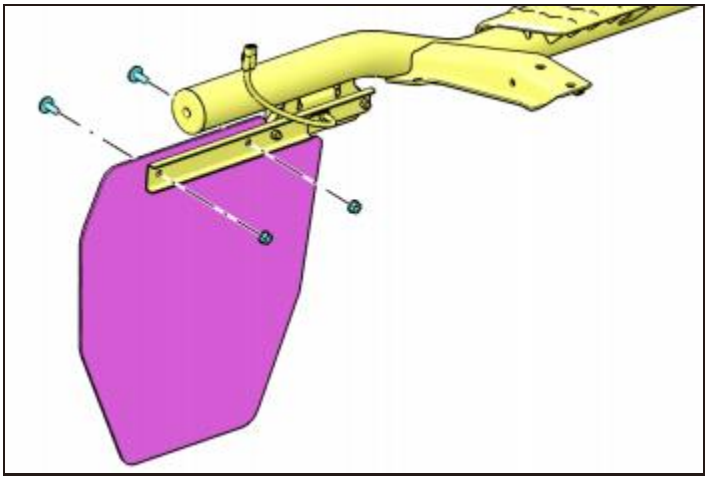

4. Place the rear bumper assembly on the hole corresponding to the cargo box bracket, fasten the rear bumper with four bolts, and tighten the four fixing bolts M8X1.25X20 with tools, torque: 22.1~29.5 ft.lbs (30 ~40N·m).

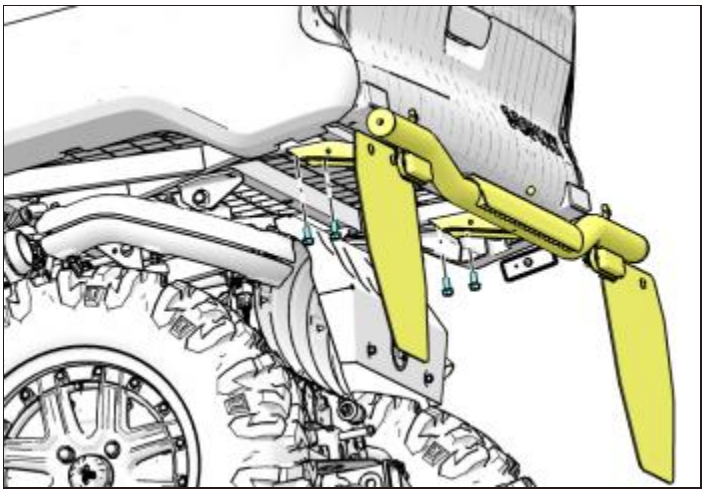

5. Insert the plugs of the fog lights and reversing lights into the reserved wiring slots, and fix them with cable ties.

Turn signal control assembly

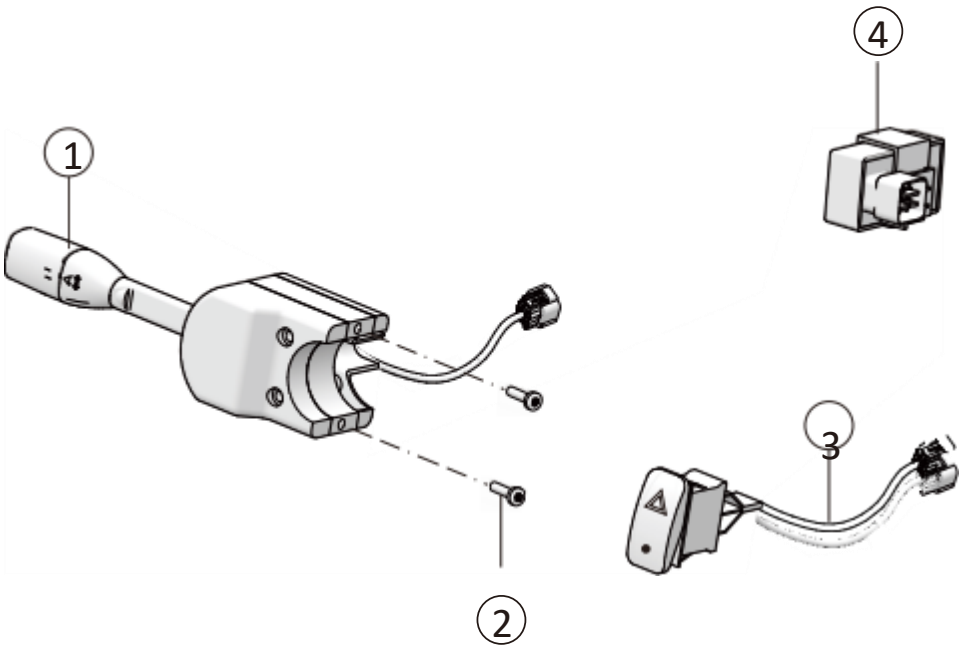

	Parts Name	Parts Number	Amount	Vehicle Type
1	COMBINATION SWITCH	U01M51000002	1	UTV
2	SCREW M5×20	GBT000818006	2	
3	EMERGENCY SWITCH	S01M51400001	1	UTV
4	FLASHER	S01M04100001	1	

Turn signal control assembly

Combination switch installation

1. Fix the combination switch to the corresponding mounting hole of the steering column with 2 screws M5×20.

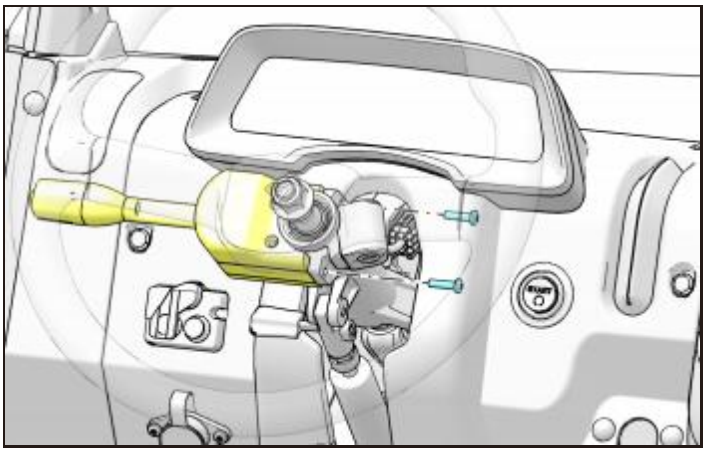

2. Remove the fasteners on the dashboard cover one by one, move the cover outwards, and find the reserved combination switch connector on the vehicle.

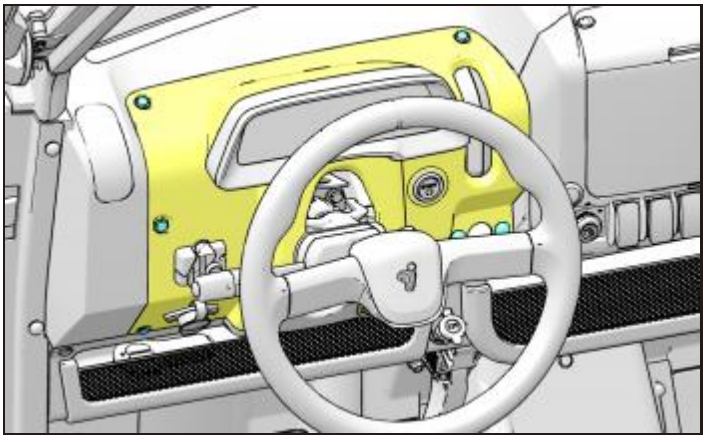

3. Connect the connector of the combination switch to the reserved connector of the combination switch on the vehicle, and fix the wiring harness with cable ties (see the figure below for the fixing position).

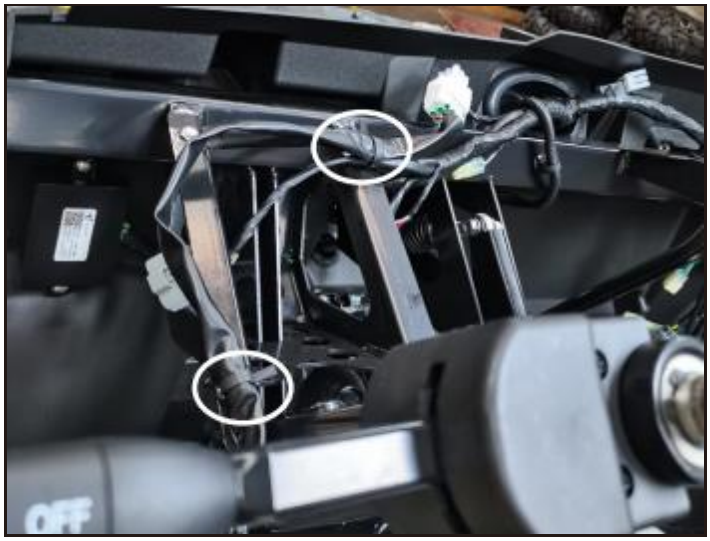

Emergency switch installation

1. Remove the switch cover under the middle storage box.

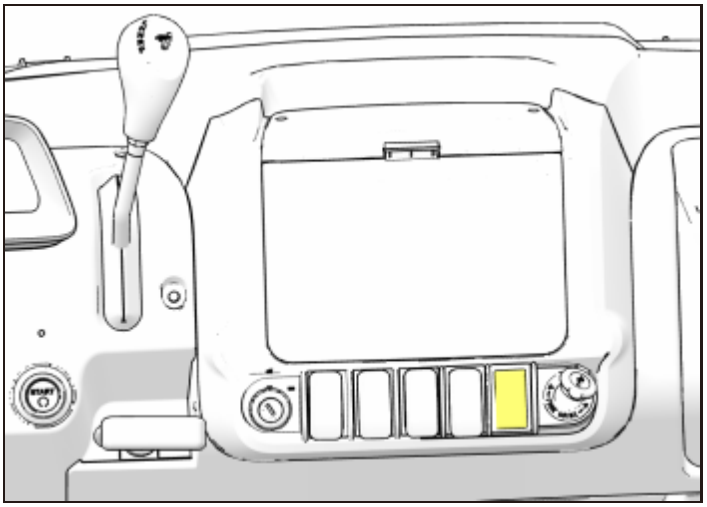

2. Remove the fasteners that fix the middle storage box, remove the middle storage box, and find the reserved emergency switch connector on the vehicle.

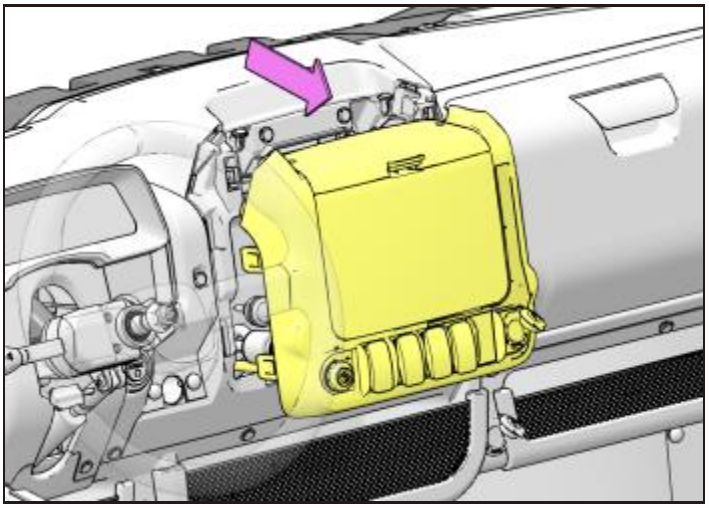

3. Pass the wiring harness of the emergency switch through the installation hole, and connect the connector of the emergency switch with the reserved connector on the vehicle.

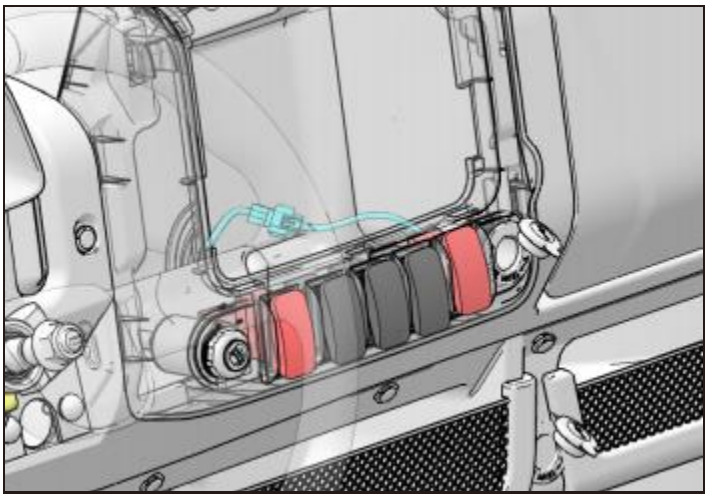

Blinker installation

1. Take off the front inspection cover assembly, the blinker mounting lugs are located below, and find the reserved blinker connector on the vehicle.

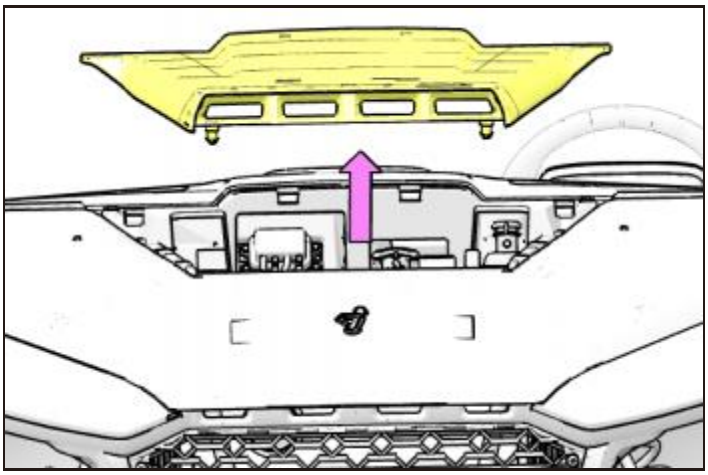

2. Connect the blinker with the reserved wiring harness on the vehicle.

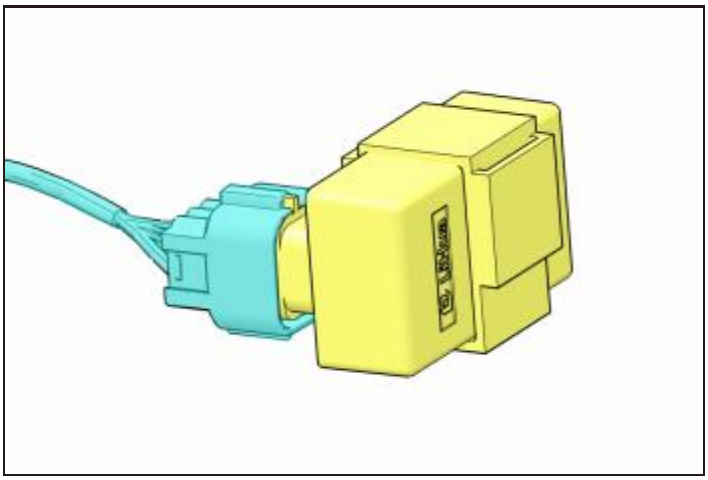

3. Insert the flasher into the corresponding mounting lug on the vehicle.

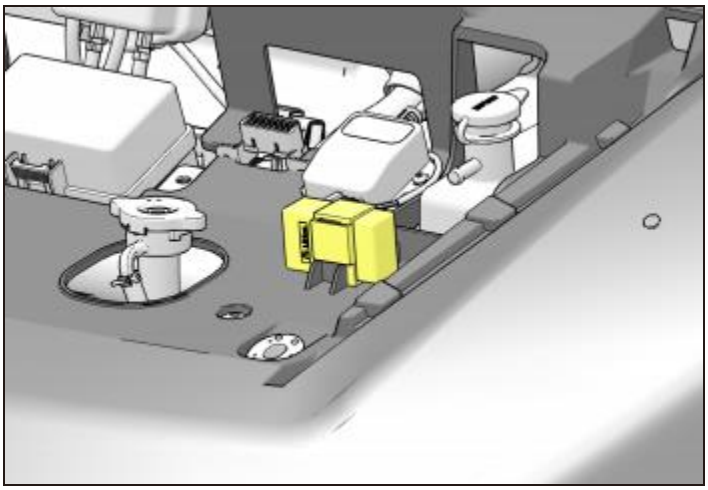

4. Turn on the power of the vehicle and test the installed turn signal control assembly. After the test is passed, install the removed dashboard cover, middle storage box and front inspection cover back to their positions in sequence.

Snow shovel assembly

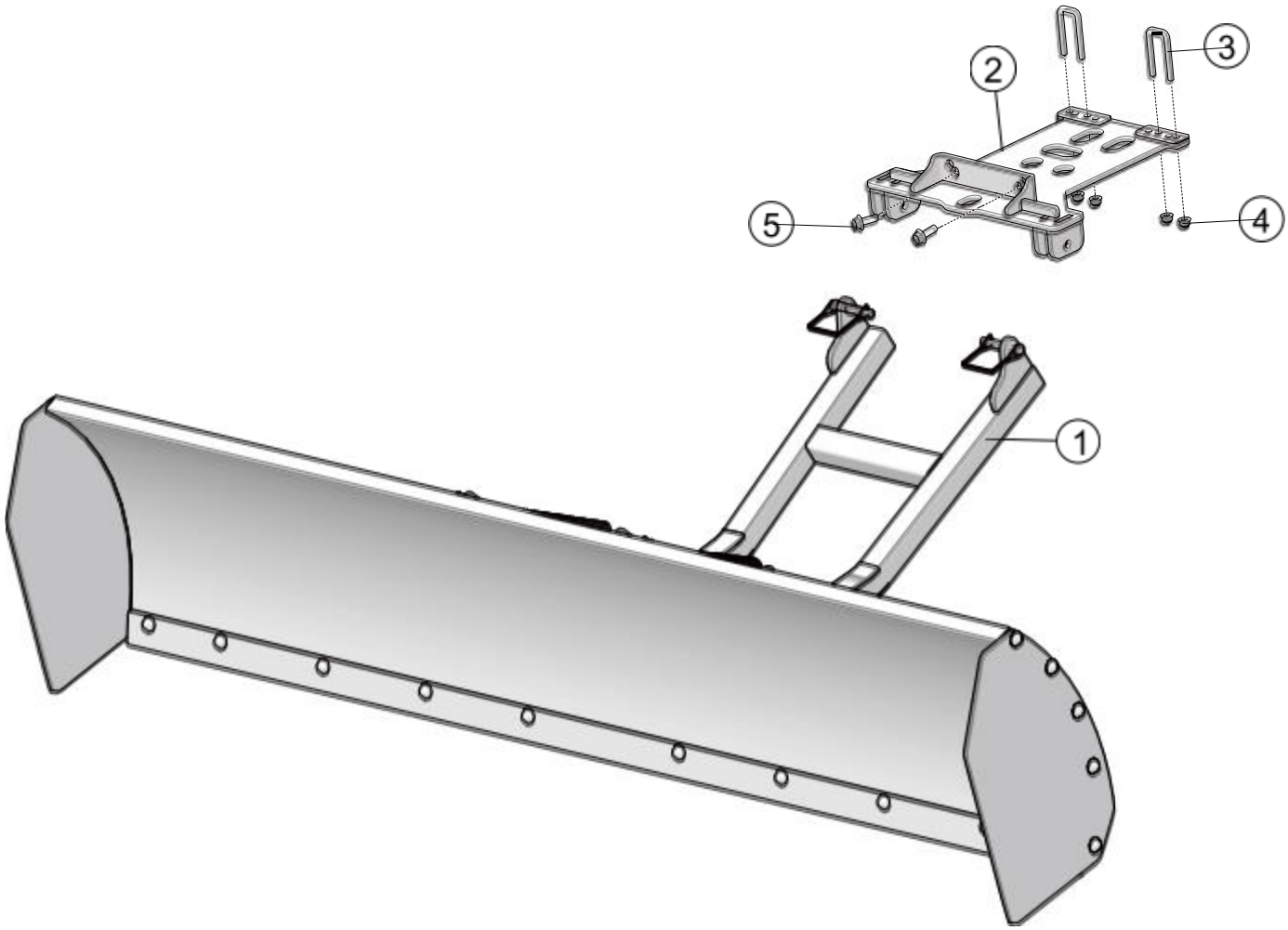

	Parts Name	Parts Number	Amount	Vehicle Type
1	Snow Plough Body - Fugleman	U01-R091200-000-00	1	UTV
2	SNOW SHOVEL FRONT ADAPTER ASSEMBLY	U01R91000001	1	
3	U-BOLT	U01-R091110-000-00	2	UTV
4	NUT M8	GBT061831003	4	
5	BOLT M10×1.25×25	GBT005789026	2	

TIPS
To use the sled assembly, it must be used in conjunction with the winch.

Snow shovel welded assembly

The welded assembly of the snow shovel are loose parts and need to be assembled first, please refer to the assembly instructions.

The snow shovel is installed after the welded assembly are assembled.

Snow Shovel Assembly Installation

1. Remove the 2 lock bolts under the front bumper.

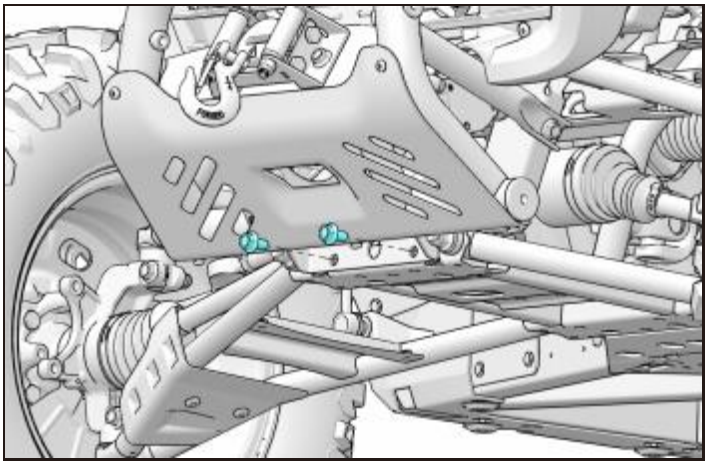

2. Place the snow shovel front adapter assembly on the lower front of the vehicle, and align the front mounting holes under the front bumper.

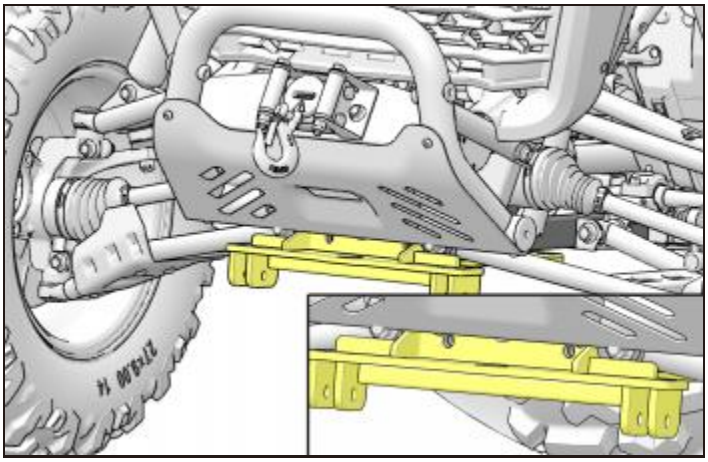

3. Use 2 pieces bolts M10×1.25×25 to fix the snow shovel front adapter assembly on the front bumper, do not tighten the bolts yet.

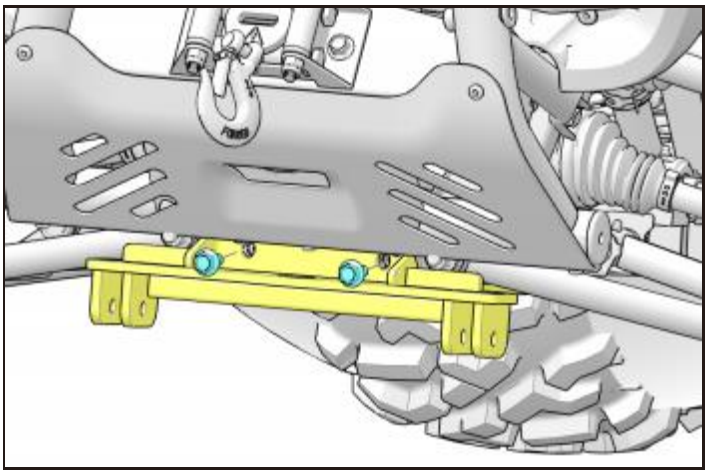

4. Adjust the front adapter assembly of the snow shovel so that it fits with front rocker lower support tube. Use U-bolts to pass through the corresponding mounting holes of the front rocker lower support tube and the front adapter assembly of the snow shovel. Use 4 pieces M8 nuts to secure, tighten all fasteners.

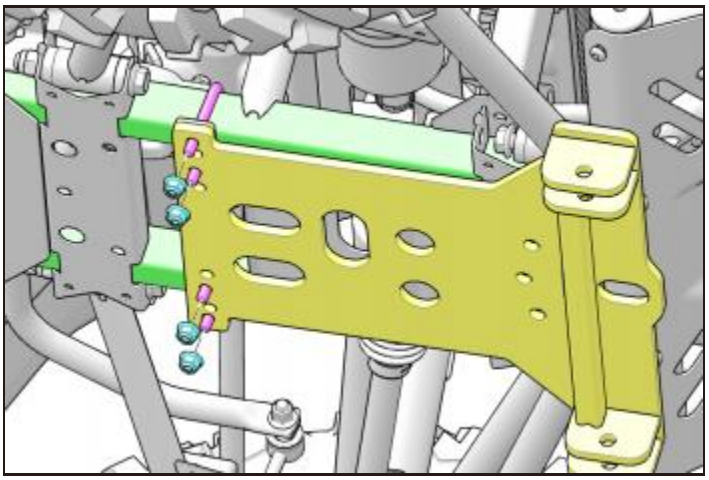

5. Unhook the steel wire buckle on the sled, pass the bolt through the fixing hole on the front adapter assembly of the snow shovel, and finally snap the steel wire buckle back onto the bolt.

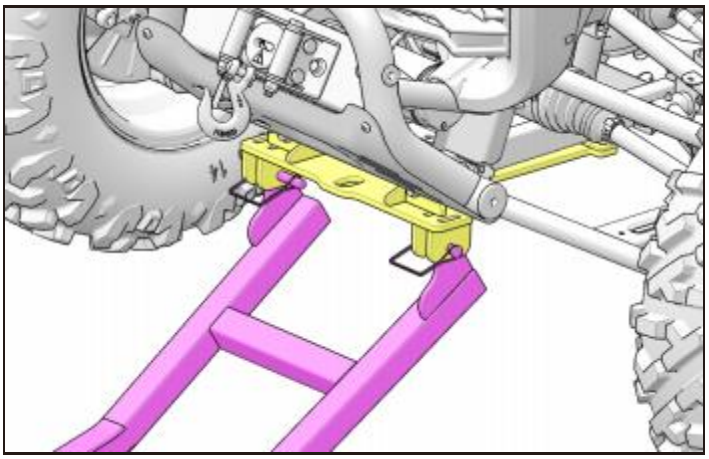

Middle rear mirror assembly

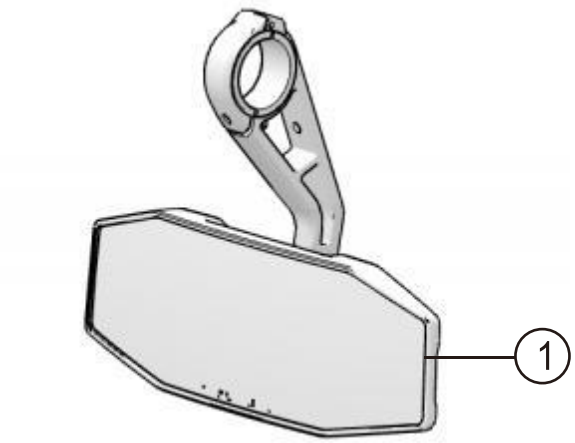

	Parts Name	Parts Number	Amount	Vehicle Type
1	Fugleman Rearview Mirror	T09000006001	1	

Middle rear mirror installation

1. Install the center rear mirror in the middle of the A-pillar connecting pipe, adjust the position, and tighten the bolts.

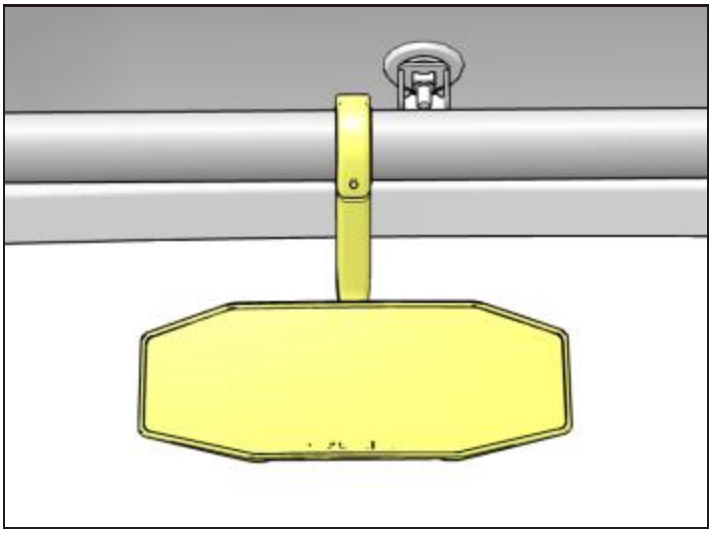

Passenger storage box

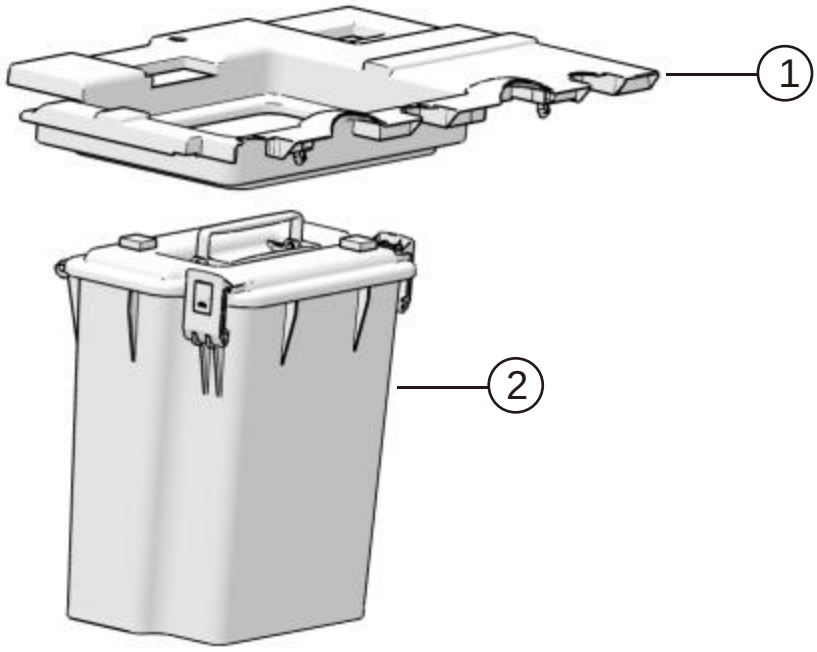

	Parts Name	Parts Number	Amount	Vehicle Type
1	SEAT CUSHION LOWER GUARD	U09-H200001-0B0-00	1	
2	PASSENGER LOWER STORAGE BOX ASSEMBLY	U09-R101000-000-00	1	

Passenger storage box installation

1. Remove the cover under the passenger seat of the vehicle.

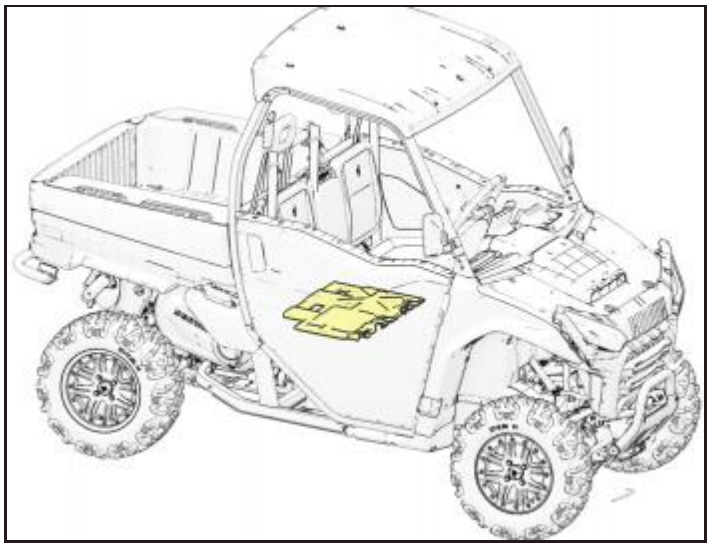

2. Install the new seat guard and snap the storage box assembly into the seat guard.

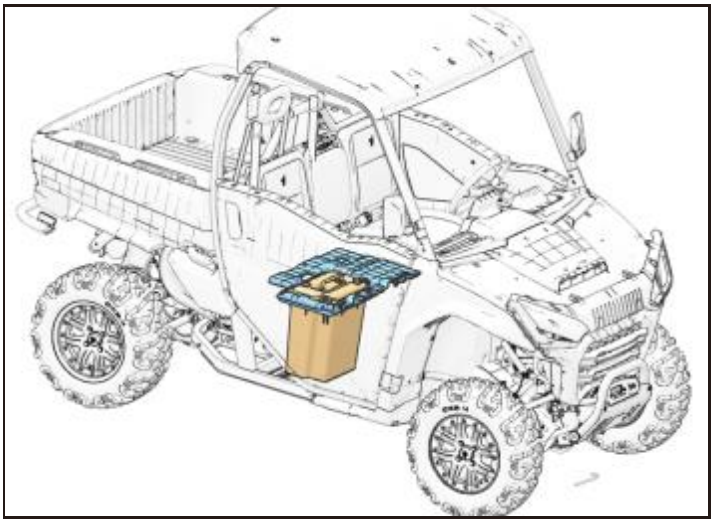

Front bracket assembly

Front bracket assembly

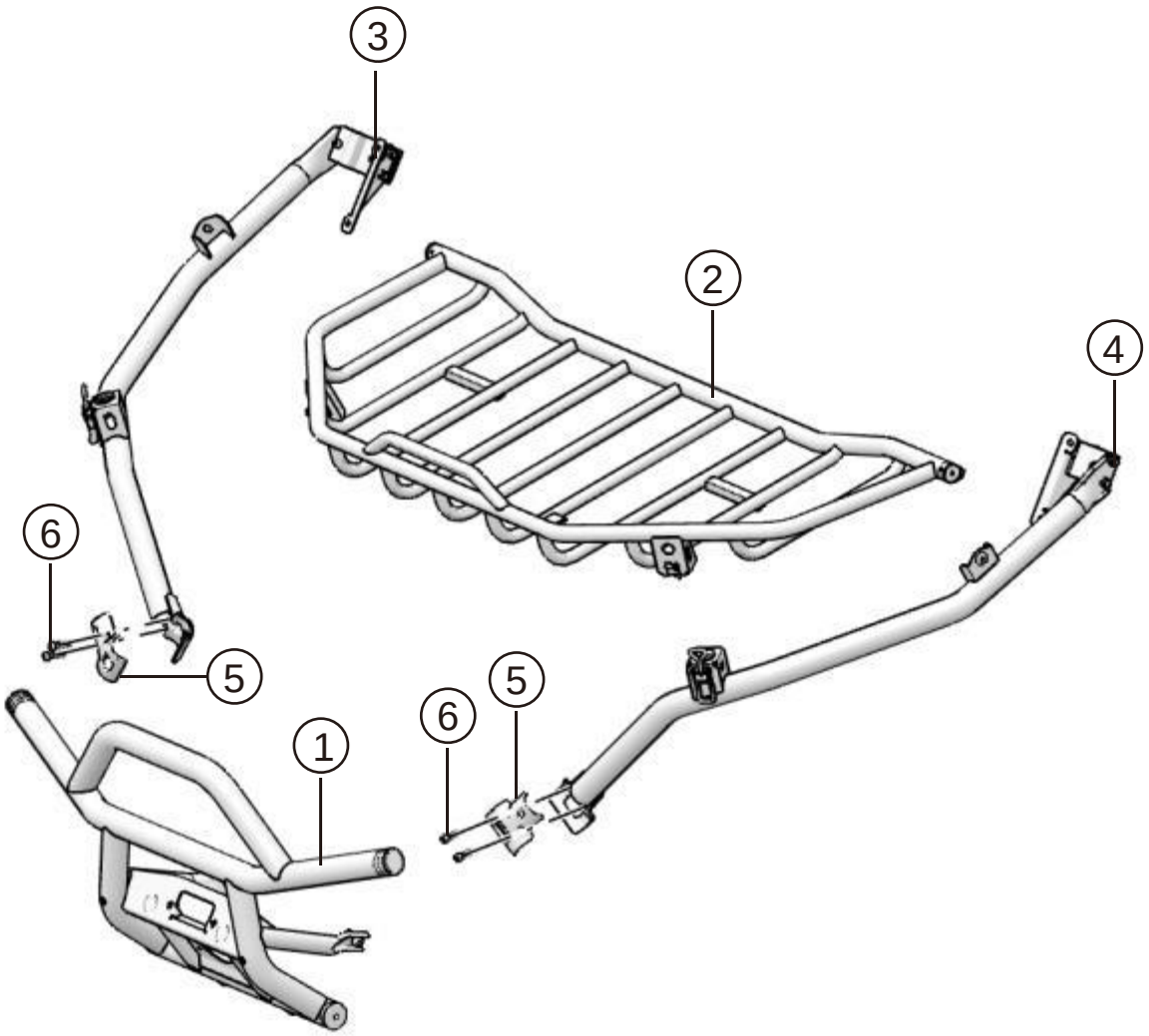

	Parts Name	Parts Number	Amount	Vehicle Type
1	FRONT LARGE BUMPER ASSEMBLY	U01C05000001	1	
2	FRONT BRACKET WELDING ASSEMBLY	U01R74100001	1	
3	FRONT RIGHT BUMPER WELDING ASSEMBLY	U01R74300001	1	
4	FRONT LEFT BUMPER WELDING GROUP	U01R74200001	1	
5	HOOP 1	S01-R001401-000-00	2	
6	SCREW M8×30	GBT000701029	4	

Front bracket assembly assembly installation

1. Remove the original bumper on the frame. If there is a winch on the bumper, remove the bumper and the winch at the same time.

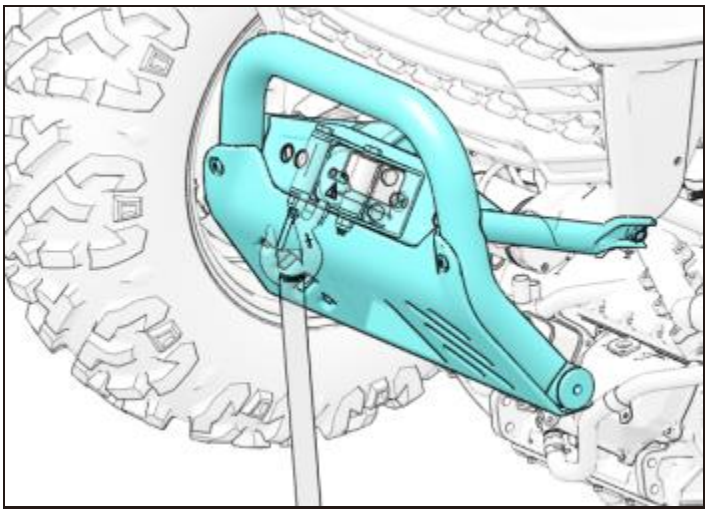

2. Install the winch (if equipped) on the new bumper.

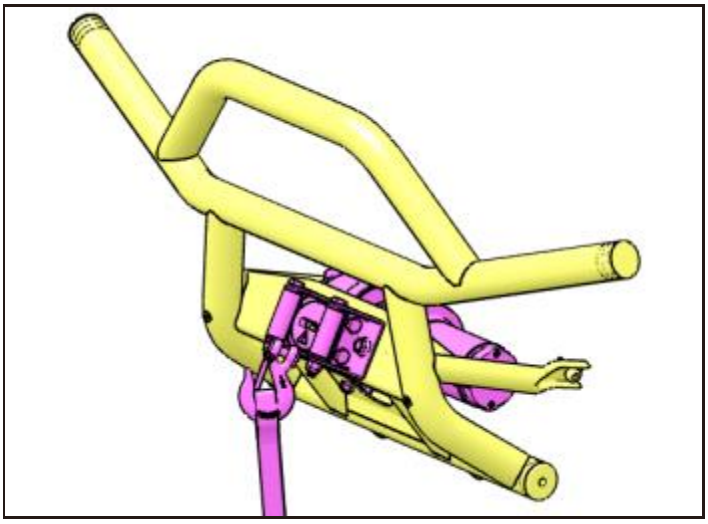

3. Install the new bumper according to the assembly method of the original bumper.

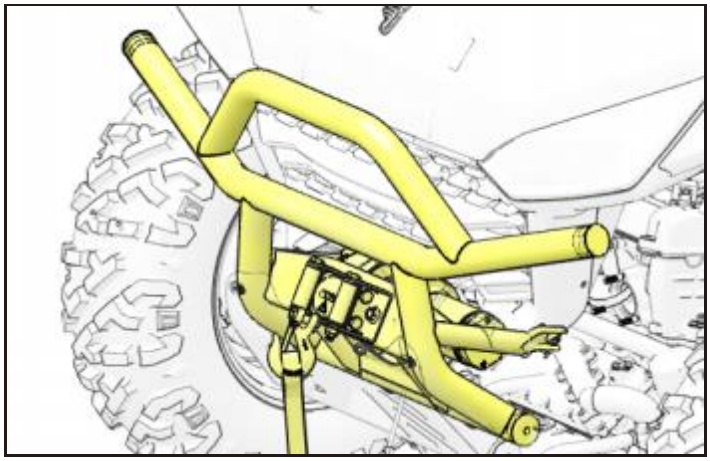

4. Fix the front end of the front left (right) bumper welding assembly on the A-pillar without tightening it.

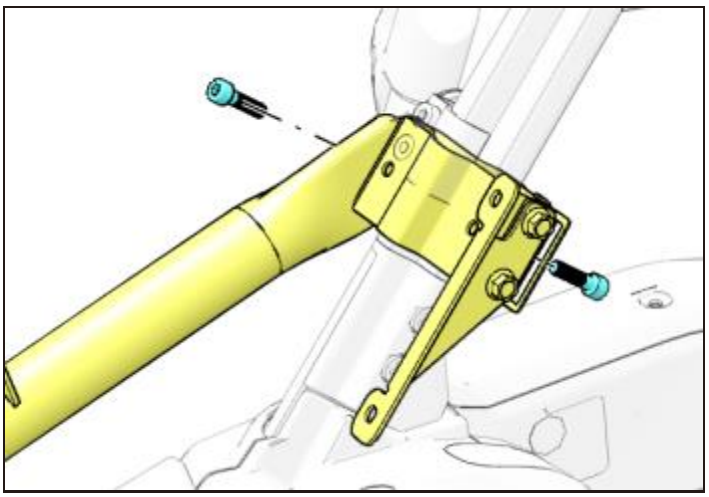

5. Fix the rear end of the welding assembly of the front left (right) bumper on the bumper without tightening it.

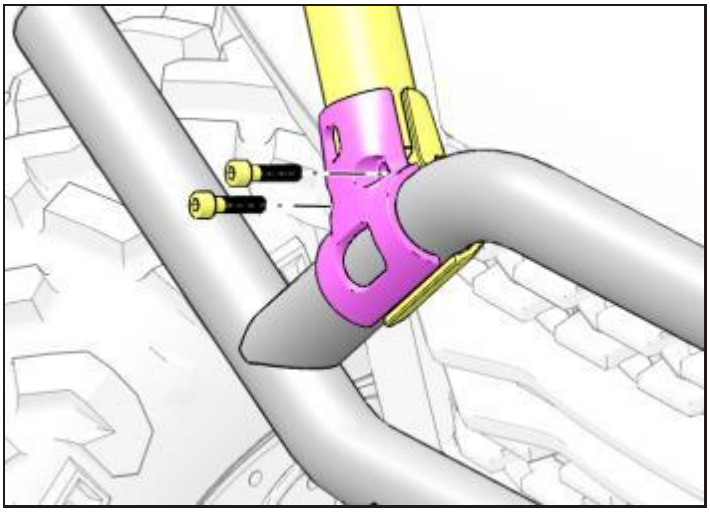

6. Install the front bracket assembly on the left and right guard bars, and tighten all the fasteners.

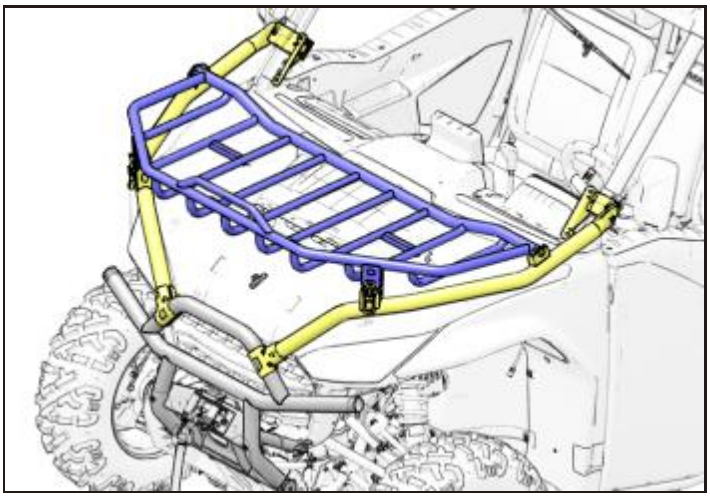

Front large bumper welding assembly

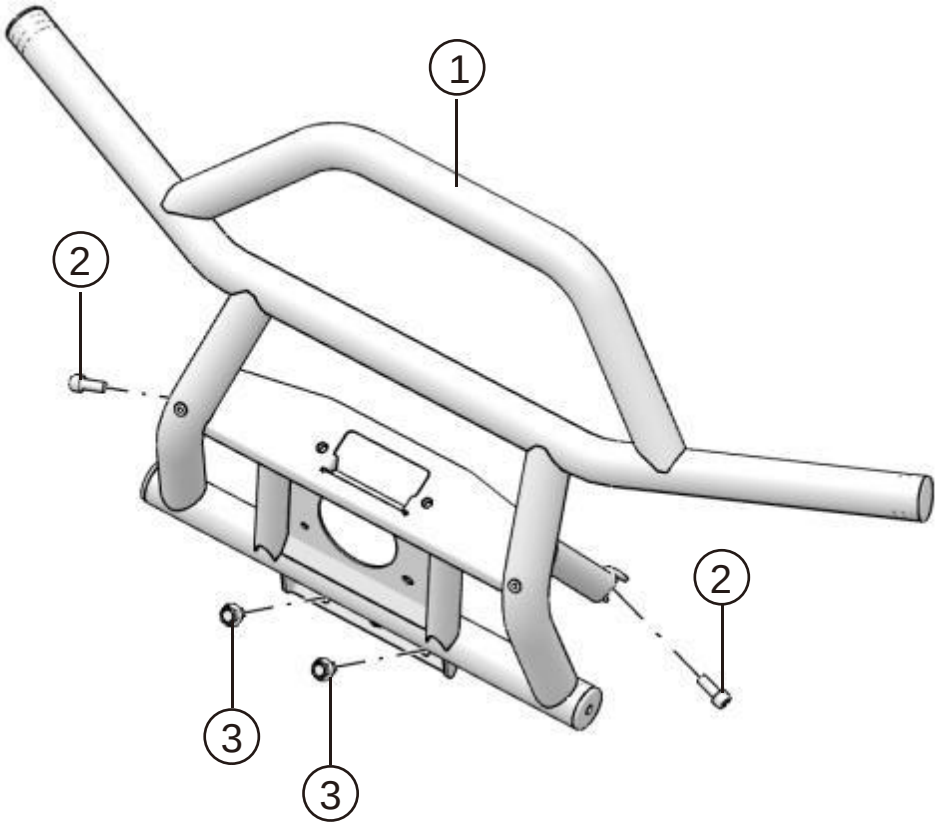

	Parts Name	Parts Number	Amount	Vehicle Type
1	FRONT LARGE BUMPER ASSEMBLY	U01C05000001	1	
2	HEXAGON SOCKET HEAD CAP BOLT M10×1.25×25	GBT000701003	2	
6	HEXAGON FLANGE BOLT M10×1.25×20	GBT005789025	2	

Front large bumper welding assembly installation

1. Remove the original bumper from the frame. If there is a winch on the bumper, remove the bumper and the winch at the same time.

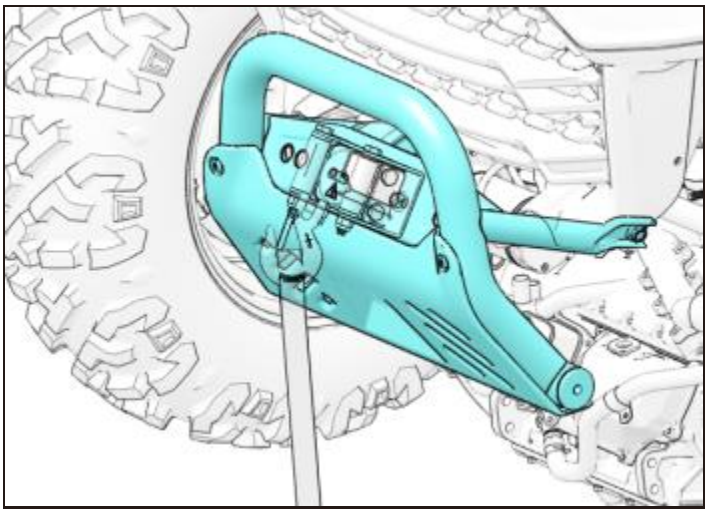

2. Remove all front bumper guards and winch from bumper.

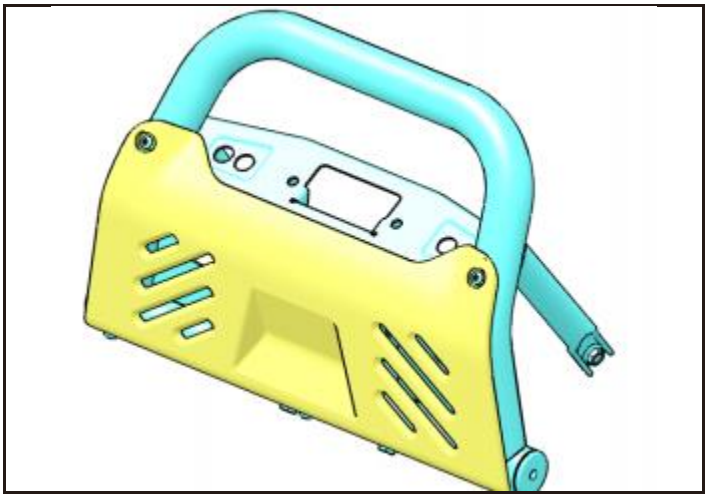

3. Install winch (if equipped) on new bumper.

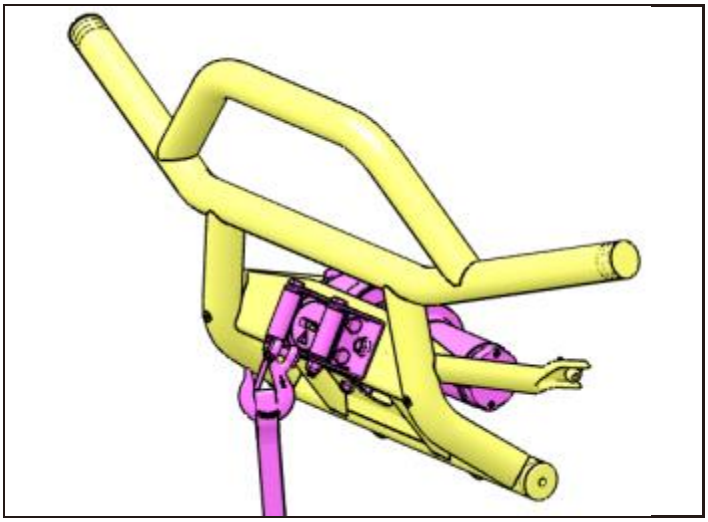

4. Install the new bumper according to the assembly method of the original bumper.

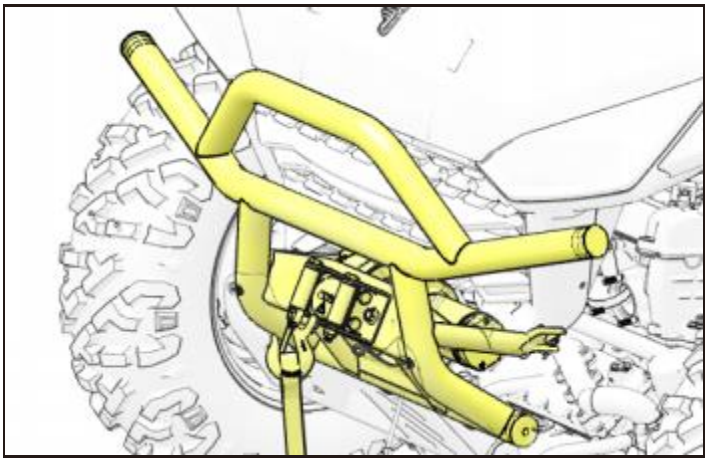

5. Install the front bumper guard on the new bumper weld assembly.

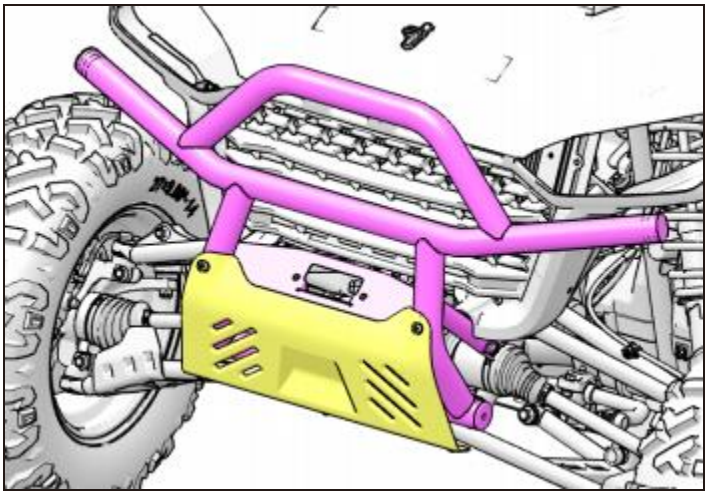

Power splitter assembly

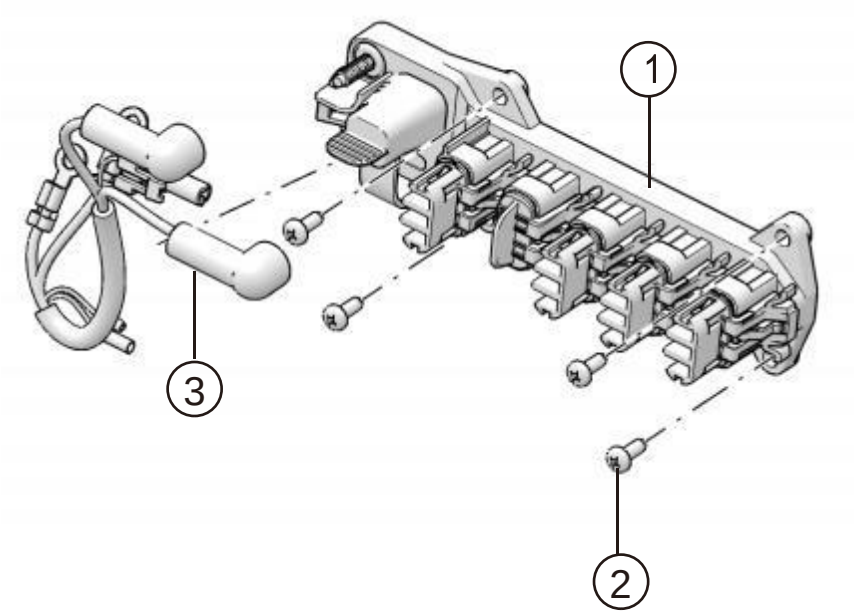

	Parts Name	Parts Number	Amount	Vehicle Type
1	POWER SPLITTER ASSEMBLY	U09-M904600-000-00	1	SSV
2	CROSS RECESSED HEXAGON SCREW ST4.8×16	GBT000845014	4	
3	POWER SPLITTER ADAPTER CABLE	U09-M110003-000-00	1	SSV/UTV

Power splitter assembly installation

1. Remove the electrical maintenance cover, which is a quick release part.

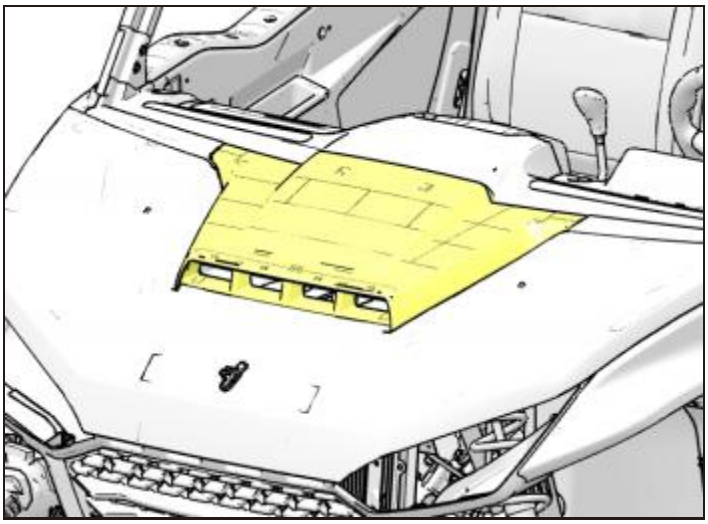

2. Install the power splitter assembly on the corresponding installation position under the electrical maintenance cover.

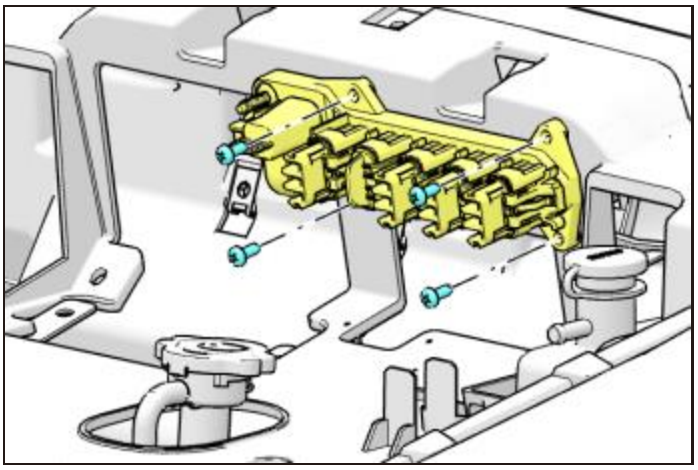

3. Connect the two ends of the power splitter adapter cable to the corresponding positions, as shown in the figure below.

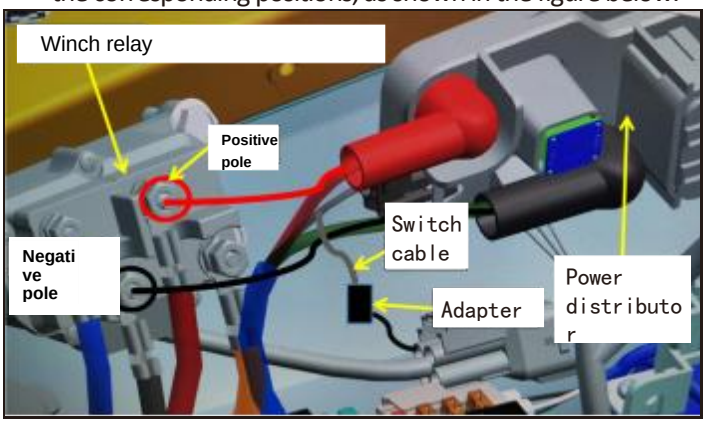

TIPS
Take power from the original car winch relay, and transfer it to the power distributor with three wires. See the diagram below for the wiring diagram: red, black, and gray.

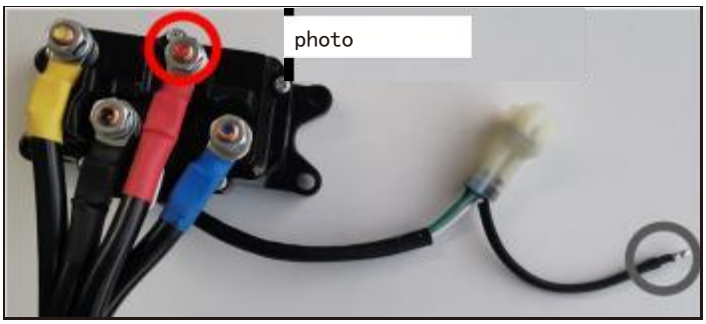

4. Re-bolt the winch switch socket and put the electrical maintenance cover back in place.

Ceiling audio assembly

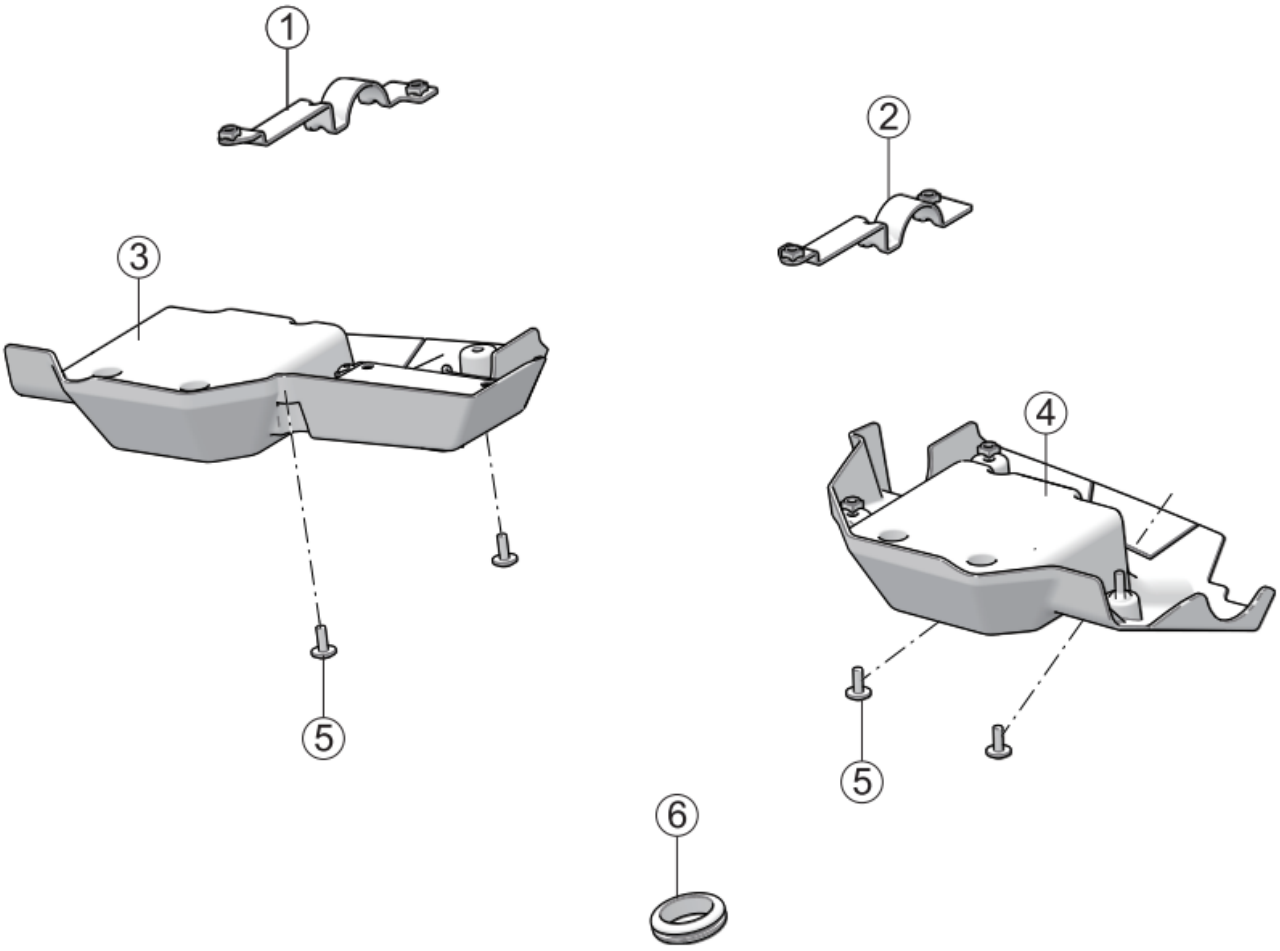

	Parts Name	Parts Number	Amount	Vehicle Type
1	Left audio bracket assembly	U09-R000050-0MP-00	1	
2	Right audio bracket assembly	U09-R000060-0MP-00	1	
3	Left audio	U03-R0M3510-000-00	1	
4	Right audio	U03-R0M3520-000-00	1	
5	Bolt M6×16	T03000007002	4	
6	Rubber ring	U01-H212000-0B0-00	1	

Installation of ceiling sound system

1. Secure the left (right) audio bracket to the A-pillar connecting tube and secure the audio components.

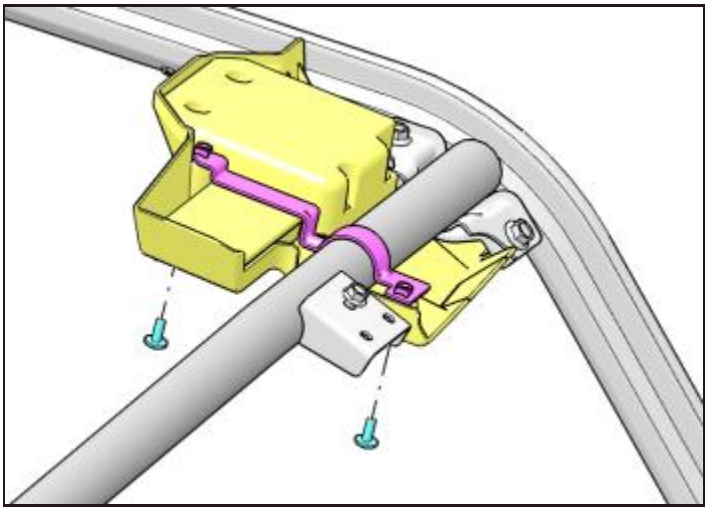

2. The other side is also bolted to the A-pillar connecting pipe.

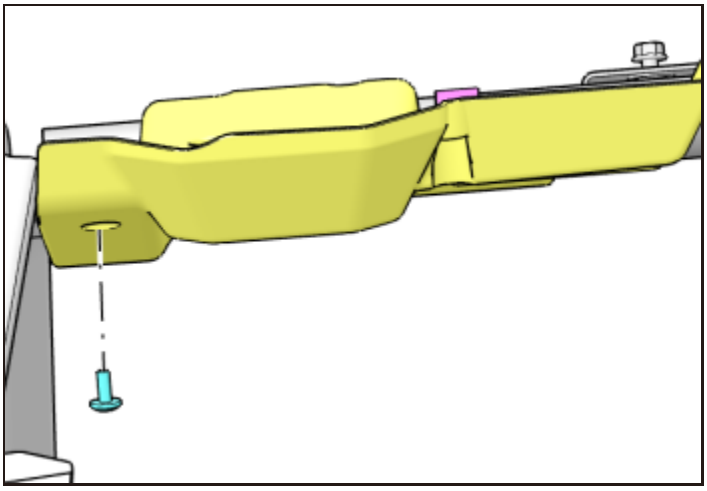

3. Use a tool to cut a hole with a diameter of 40mm at the left side of the body on the dashboard, and clip the rubber ring into the hole。

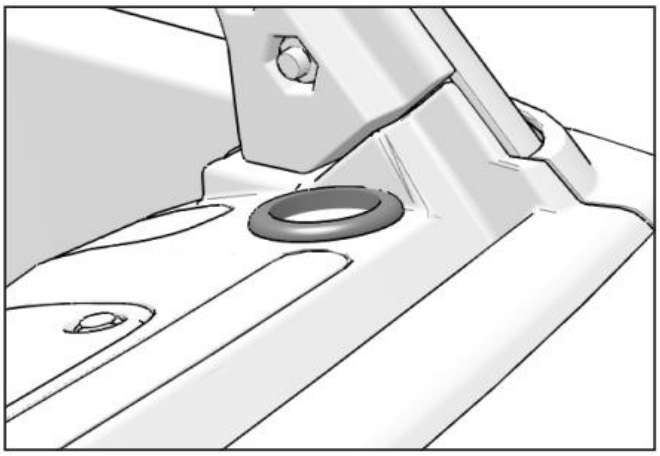

4. Connect the left and right audio systems using a data cable.

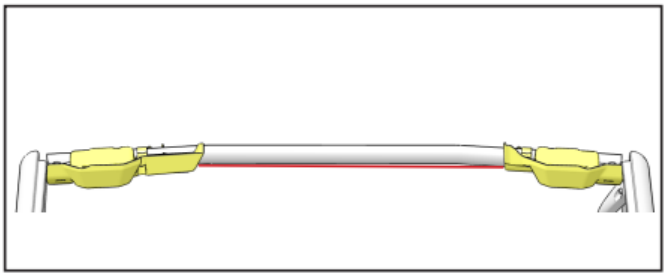

5. Route the audio power cord along the left A-pillar pipe as shown in the figure below and secure it with a tie at a suitable location.

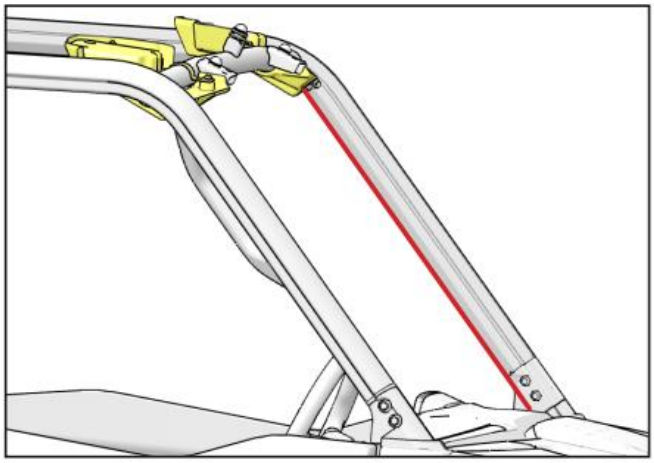

6. Thread the wiring harness through the circular hole cut on the instrument panel and connect the power cord socket to the power distributor, which is located under the electrical maintenance cover.

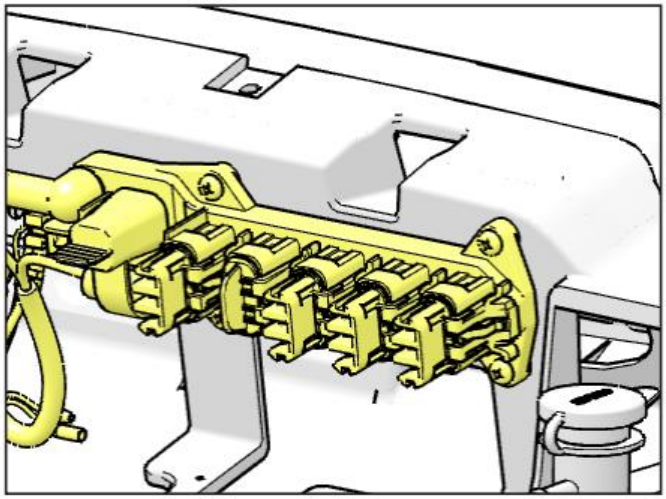

Cargo box mesh assembly

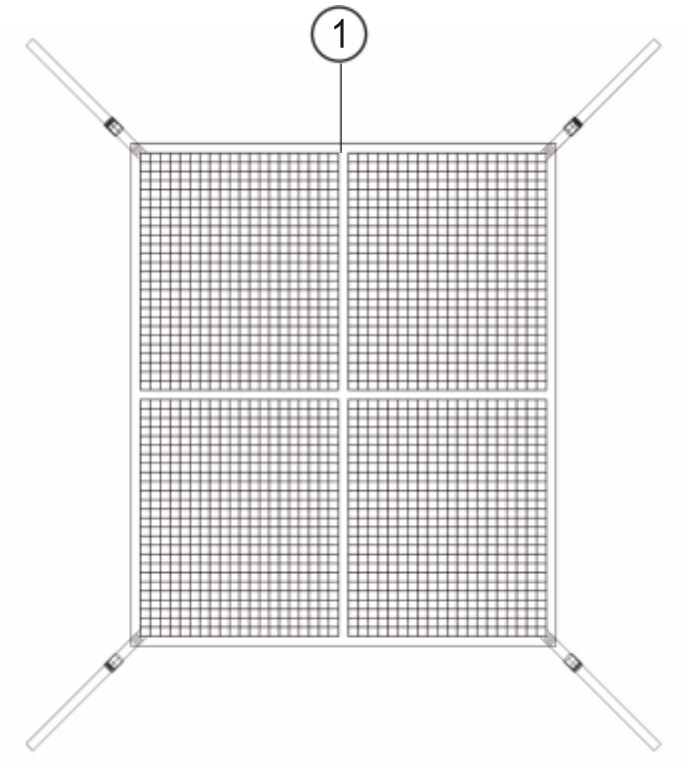

	Parts Name	Parts Number	Amount	Vehicle Type
1	Cargo Net - UTV	U01R51100001	2	

Cargo box mesh installation

1. Fix the four mesh straps to the rear cargo box hooks at the four corners of the cargo box.

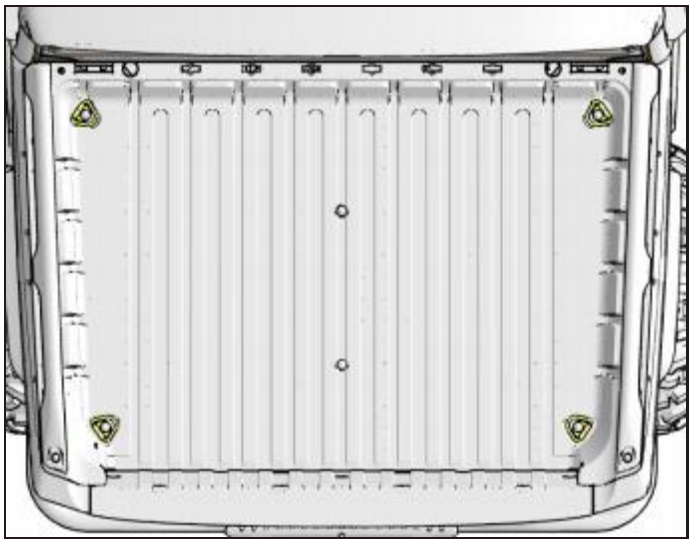

CAUTION

Do not exceed the maximum load capacity of the vehicle.

Side door mesh assembly

Side door mesh assembly

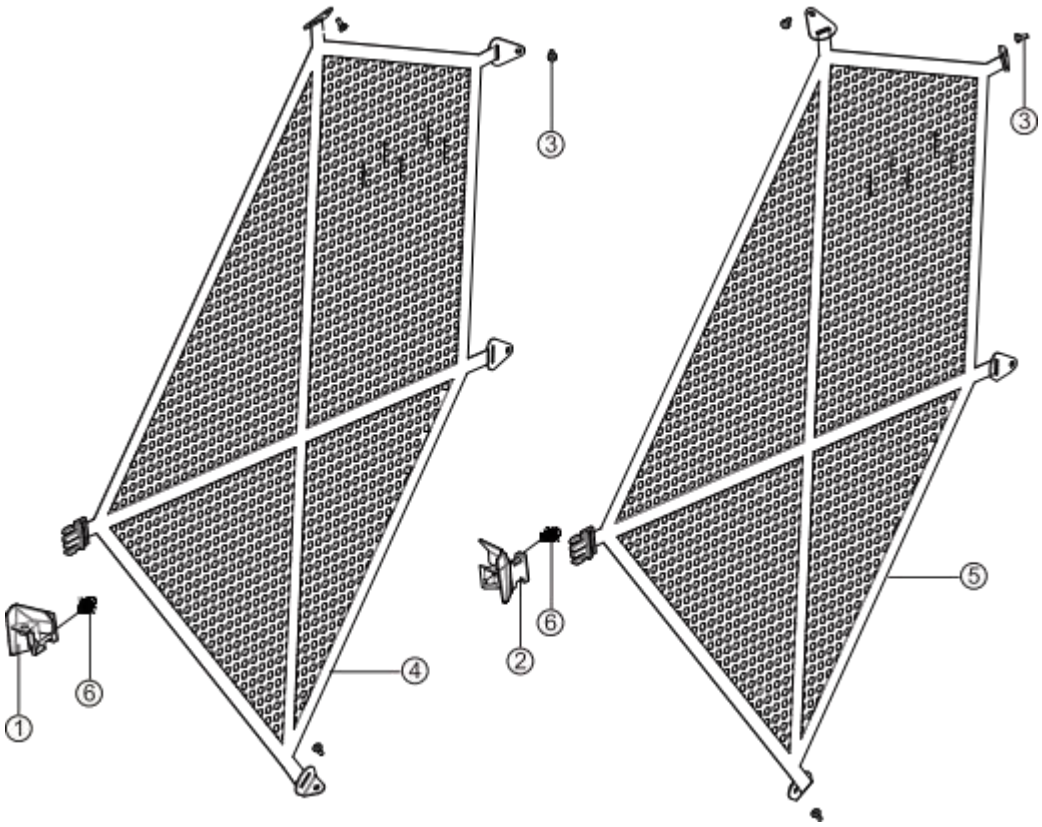

	Parts Name	Parts Number	Amount	Vehicle Type
1	U01 MESH DOOR LOCK R (COLOR MASTER)	U01R52101002		
2	U01 MESH DOOR LOCK L (COLOR MASTER)	U01R52101001		
3	U01 BOLT M6	U01F10001001		
4	U01 RIGHT HALF DOOR MESH ASSY	U01R52100002		
5	U01 LEFT HALF DOOR MESH ASSY	U01R52100001		
6	SCREW M6×20	GBT000701011	2	

Side door mesh assembly installation

1. Fix the left (right) mesh side door latches on both sides

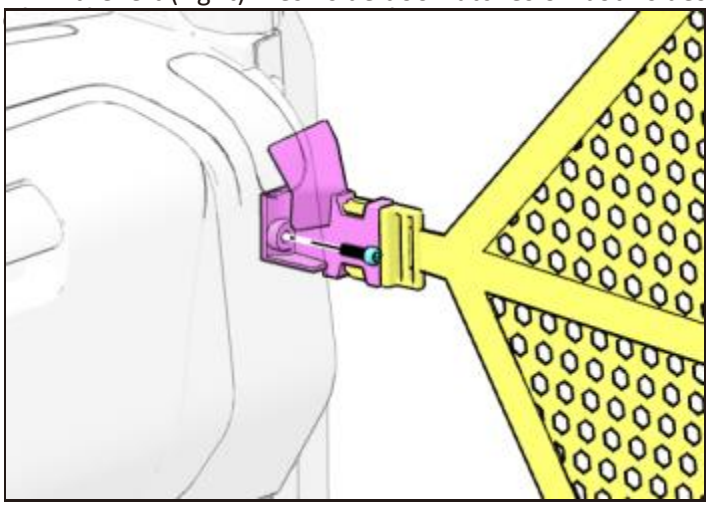
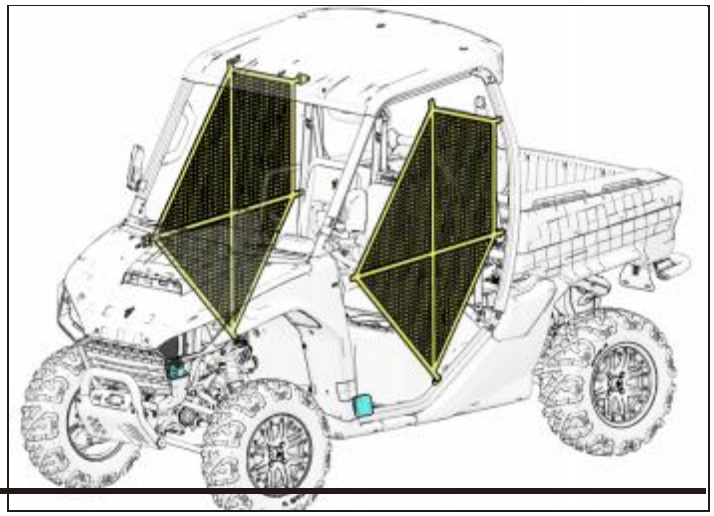
2. Fix the rest of the fixing heads of the mesh cloth to the corresponding position of the vehicle with bolts, and install the foot guard.