SEGWAY

SEGWAY UT10
ACCESSORIES INSTALLATION MANUAL



segwaypowersports.com

V2.0

REAR WINDSHIELD ASSEMBLY

NOTE

The rear windscreen assembly has two States: it is installed according to the selected state.

REAR WINDSHIELD ASSEMBLY

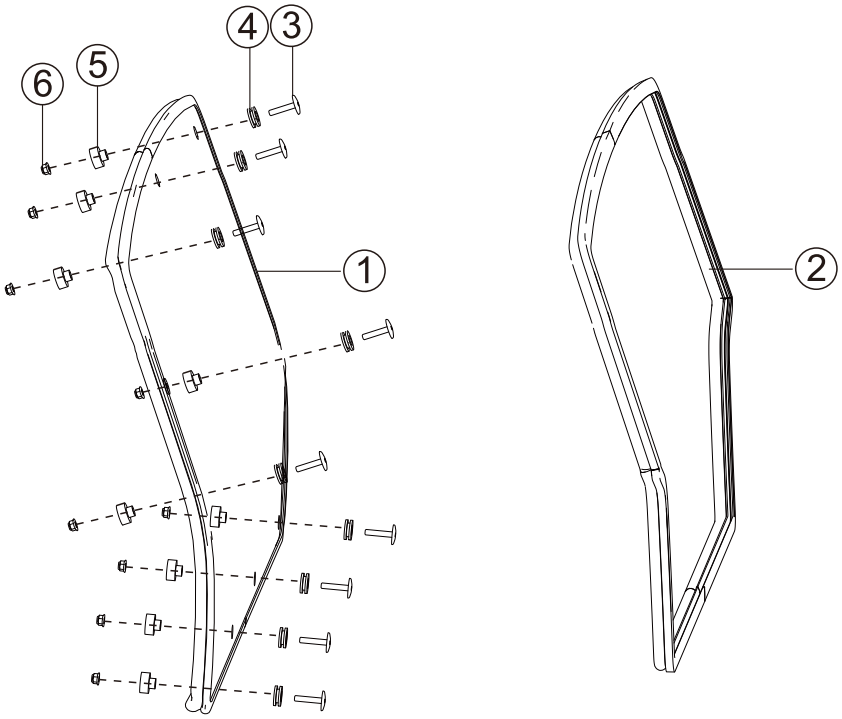

NO.	PART NAME	PART NUMBER	QUANTITY	REMARKS
1	Rear windshield assembly	U01R62000001	1	UTV
2	Rear windshield assembly (high air inlet)	U01R62000002	1	UTV (high air inlet)
3	Windshield screw M8 × 40	T03000009001	9	UTV
4	Rubber compressor grommet	T00000004001	9	UTV
5	Rubber panel grommet	U01R62002001	9	UTV
6	Flanged lock nut	GBT061831003	9	

REAR WINDSHIELD ASSEMBLY

INSTALLATION OF REAR WINDSHIELD ASSEMBLY

NOTE

This windscreen is not suitable for high intake systems.

1. Align the holes of the rear windshield assemblywith the mounting holes at the rear of the roof.

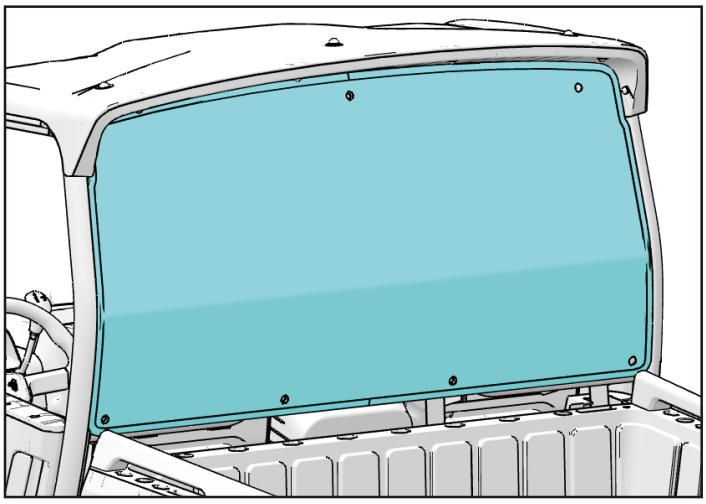

2. Install the windshield using the mounting holes. Place the rubber compressor grommet on the inside of the windscreen, the rubber panel grommet through the mounting hole, and use the M8x40 screw and nut to affix everything in place and torque to spec.

Torque value: 8 ~15N·m (0.8~1.5kgf·m, 6~11ft·lb)

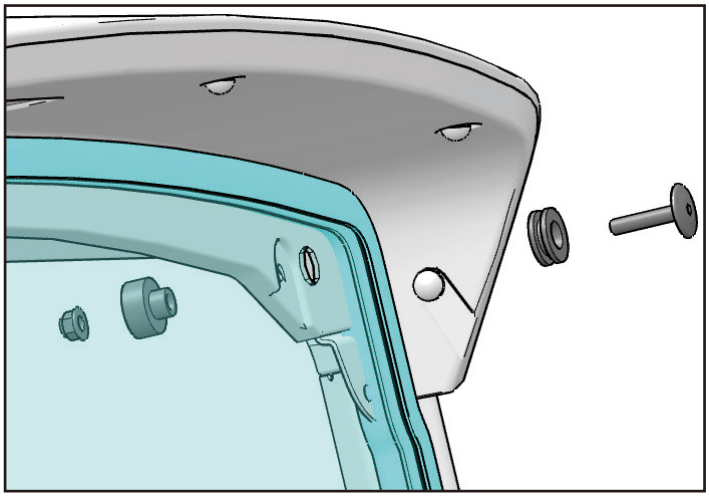

INSTALLATION OF REAR WINDSHIELD ASSEMBLY (HIGH AIR INLET)

1. Align the holes of the rear windshield assemblywith the mounting holes at the rear of the roof.

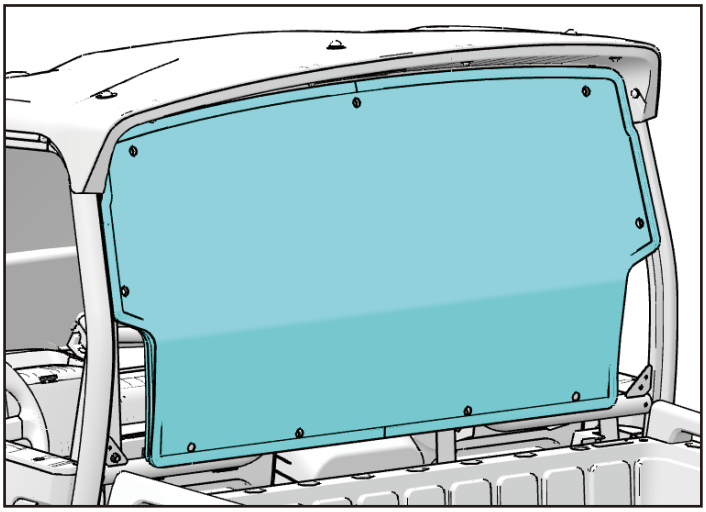

2. Install the windshield using the mounting holes. Place the rubber compressor grommet on the inside of the windscreen, the rubber panel grommet through the mounting hole, and use the M8x40 screw and nut to affix everything in place and torque to spec.

Torque value: 8 ~15N·m (0.8~1.5kgf·m, 6~11ft·lb)

