UT10 Crew Aluminum Skid Plate

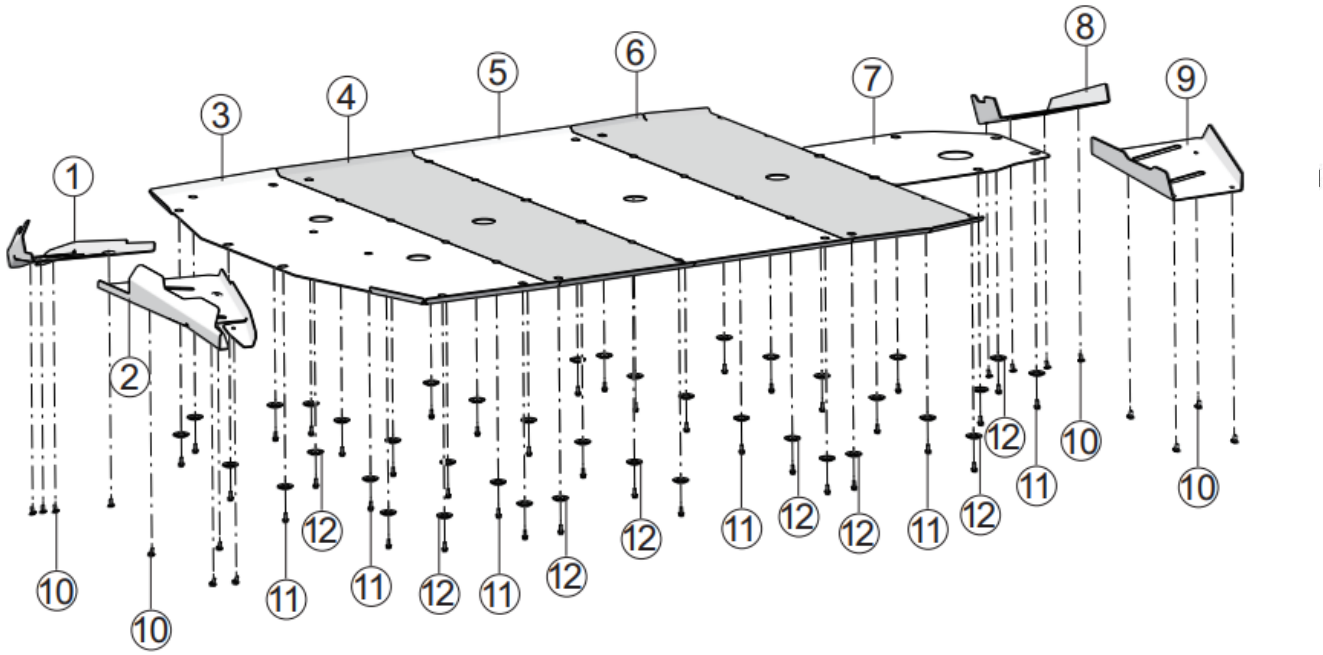

No.	Part name	Part number	QTY	Model
1	RF LOWER ROCKET ARM GUARD	U01R10006001	1	
2	LR LOWER ROCKET ARM GUARD	U01R10005001	1	
3	LOWER FRONT GUARD	U01R10002001	1	
4	BOTTOM MID GUARD 1	U03-R110002-FH0-00	1	
5	BOTTOM MID GUARD 2	U03-R110001-FH0-00	1	
6	LOWER MID GUARD	U01R10003001	1	
7	BOTTOM REAR GUARD	U03-R110003-FH0-00	1	
8	RR LOWER ROCKET ARM GUARD	U01R10009001	1	
9	LR LOWER ROCKET ARM GUARD	U01R10008001	1	
10	HEXAGON BOLT M6×16	T03000007002	16	
11	BOLT M6×16	GBT005789007	40	
12	WASHER	U01R10001001	40	

UT10 Crew Aluminum Skid Plate

Removal of the vehicle's original bottom guard

Remove the existing bottom guard from the vehicle before installing a new one.

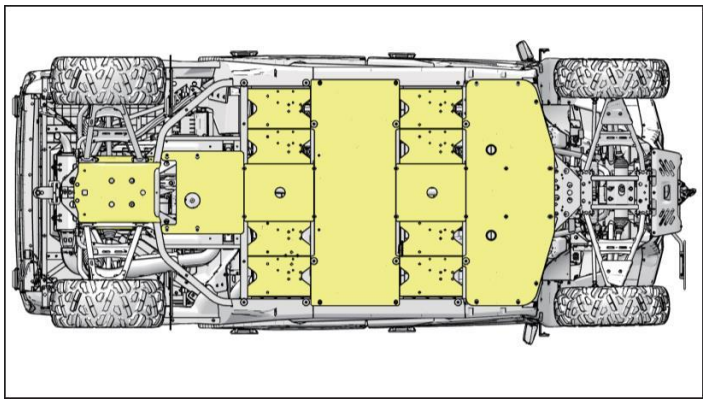

TIPS
There is no order of precedence in removal

1. Remove the fasteners on the guard to be replaced in order and remove the bottom guard.

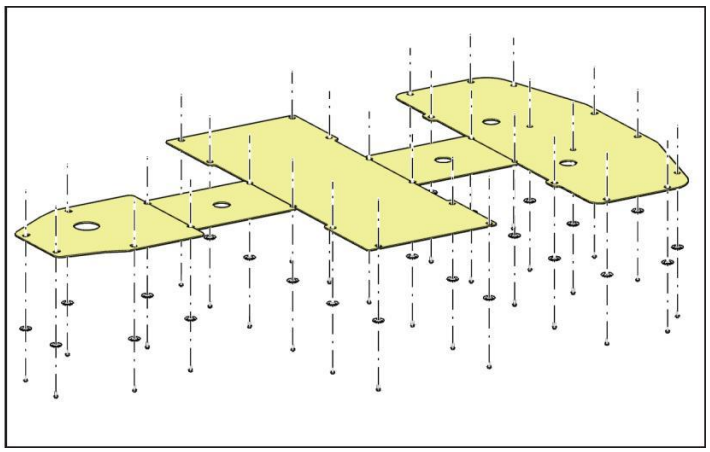

Bottom Guard Installation

1. Fix the new front and rear rocker arm bottom guard with hexagonal bolt M6×16, torque value: 8~12N-m (0.8~1.2kgf-m, 69~103.6in-lb).

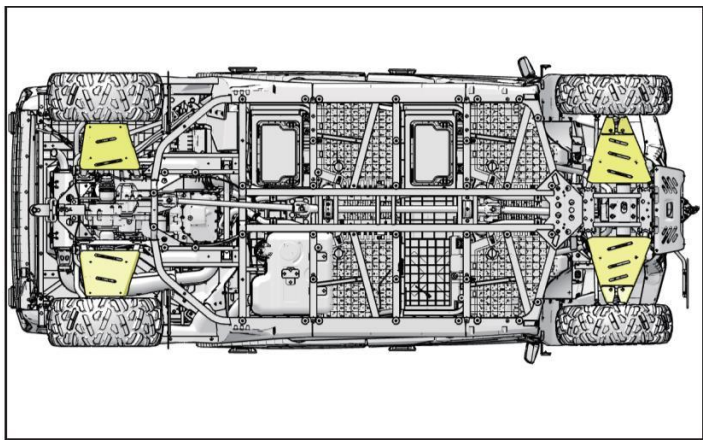

2. Fix the new front, middle and rear guards of the chassis with hexagonal flange bolts M6×16 with washers, torque value: 8~12N-m (0.8~1.2kgf-m, 69~103.6in-lb).

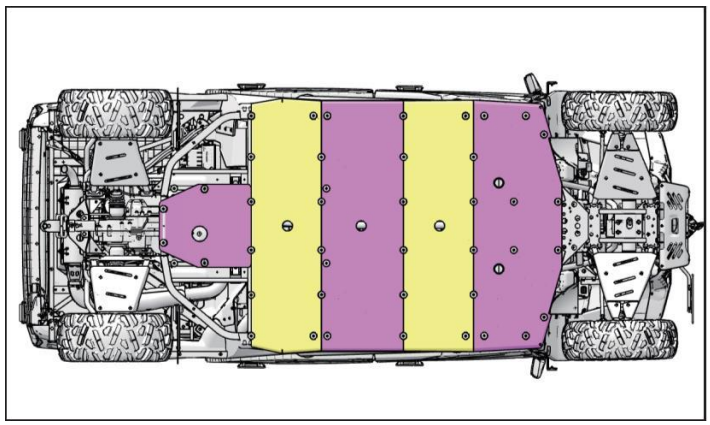

TIPS
Installation is not sequential