SEGWAY

SEGWAY UT10
ACCESSORIES INSTALLATION MANUAL



segwaypowersports.com

V2.0

ALUMINUM SKID PLATE

Aluminum skid plate

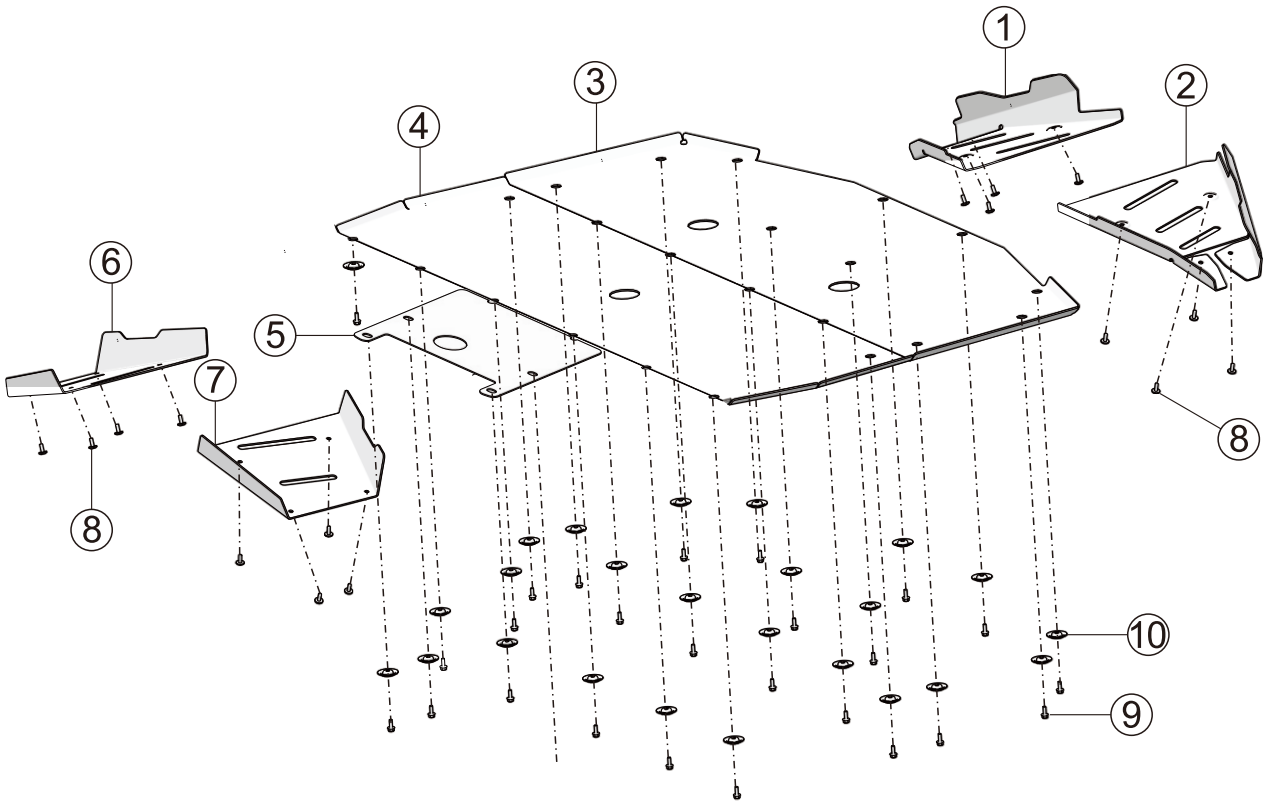

NO.	PART NAME	PART NUMBER	QUANTITY	REMARKS
1	Left front a-arm guard	U01R10005001	1	UTV
2	Right front a-arm guard	U01R10006001	1	UTV
3	Chassis front guard	U01R10002001	1	UTV
4	Chassis middle guard	U01R10003001	1	UTV
5	Chassis rear guard	U09-R105001-0H1-00	1	UTV
6	Left rear a-arm guard	U01R10008001	1	UTV
7	Right rear a-arm guard	U01R10009001	1	UTV
8	Hexagon socket bolt M6 × 16	T03000007002	16	
9	Hexagon flange bolt M6 × 16	GBT005789007	26	
10	Fish-eye washer	U01R10001001	26	

ALUMINUM SKID PLATE

REMOVAL OF ORIGINAL SKID PLATE

Remove the original skid plate before installing the new aluminum skid plate.

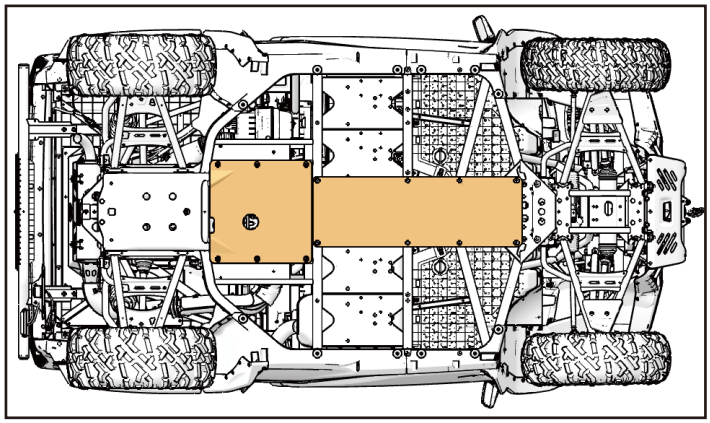

NOTE

There is not a particular order of removal.

1. Remove the screws holding the original skid plate in place and remove the original skid plate.。

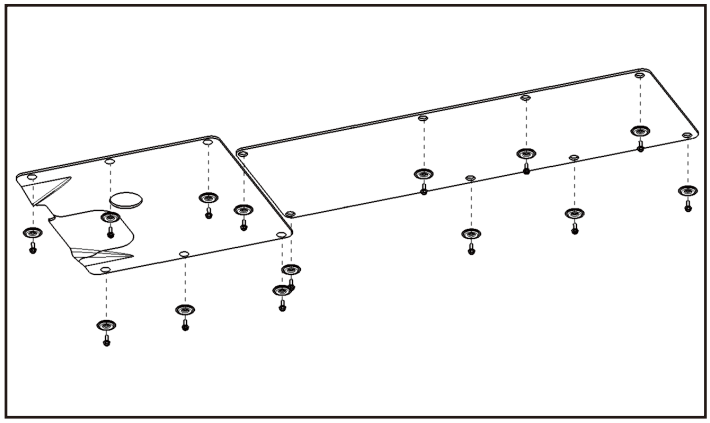

ALUMINUM SKID PLATE INSTALLATION

1. Attach the skid plates for the front and rear a-arms with the M6x16 bolts.

Torque : 20 ~ 30N·m (2.0~3.0kgf·m，12.1~19.5ft·lb)

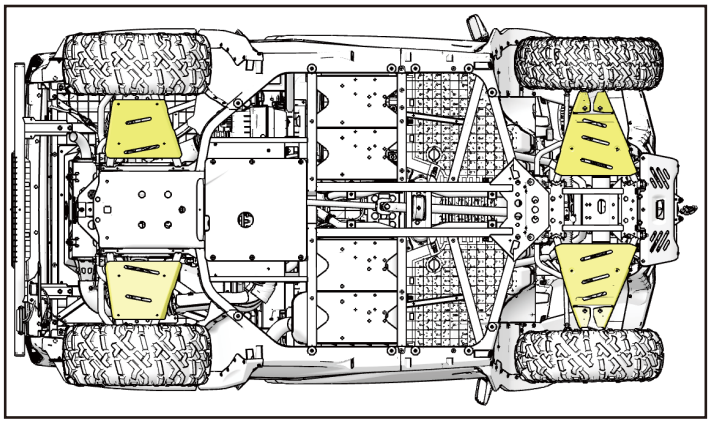

2. Attach the front, middle, and rear pieces of the aluminum skid plate with the M6x16 flange bolts and washers.

Torque : 20 ~ 30N·m (2.0~3.0kgf·m，12.1~19.5ft·lb)

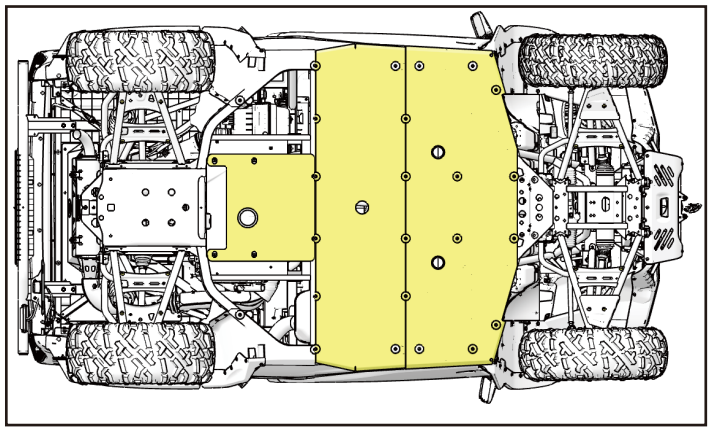

NOTE

There is not a specific installation order sequence.