SEGWAY

SEGWAY SX10
ACCESSORIES INSTALLATION GUIDE



SKID PLATES (64")

Skid Plates (64")

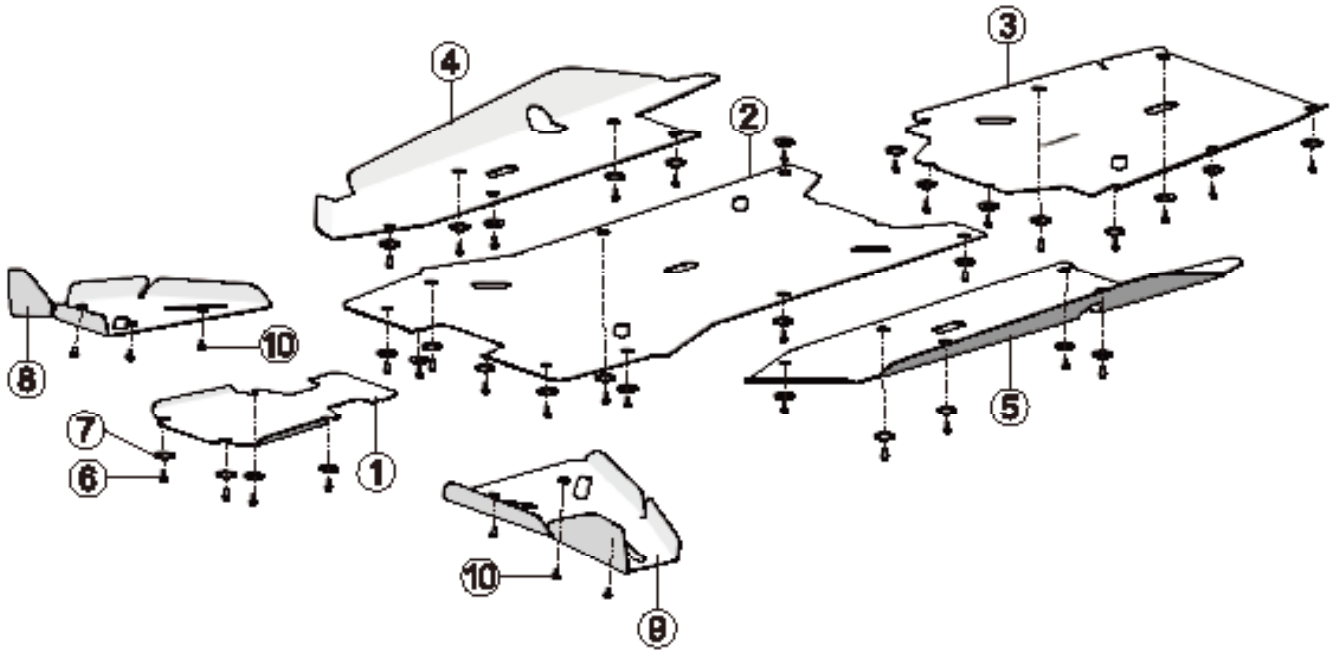

NO.	PART NAME	PART NUMBER	QUANTITY	APPLICABLE MODELS
1	CHASSIS FRONT GUARD	S01R10110001	1	SSV
2	CHASSIS MID GUARD	S01R10120001	1	SSV
3	CHASSIS REAR GUARD	S01R10150001	1	SSV
4	CHASSIS RIGHT SIDE GUARD	S01R10140001	1	SSV
5	CHASSIS LEFT SIDE GUARD	S01R10130001	1	SSV
6	HEXAGON FLANGE BOLTS M6×16	GBT005789007	32	
7	FISHEYE GASKET	U01R10001001	32	
8	FRONT RIGHT LOWER ROCKER ARM GUARD	S01R10170001	1	(64 ")
9	FRONT LEFT LOWER ROCKER ARM GUARD	S01R10160001	1	(64 ")
10	HEXAGON SOCKET BOLT M6×20	T03000007001	6	

SKID PLATES (64") INSTALLATION

1. Fix the front left (right) lower rocker arm guard with a large pan head socket head cap bolt M6×16, torque value: 8~12N·m（0.8~1.2kgf·m，69~103.6in·lb）

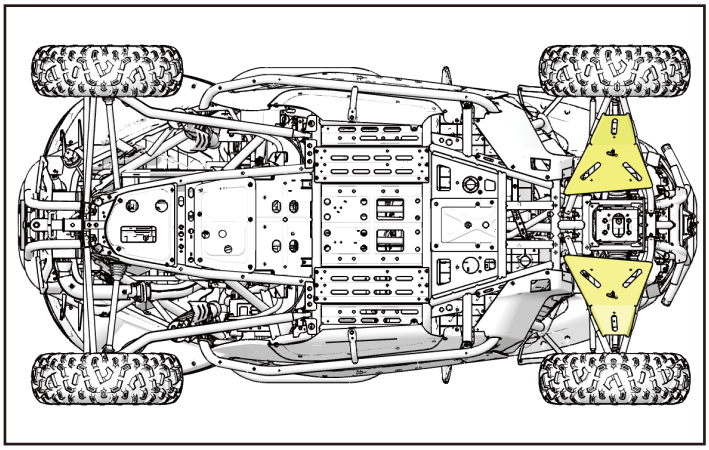

2. Fix the chassis guard with hexagonal flange bolts M6×16 and fisheye gasket, torque value: 8~12N·m（0.8~1.2kgf·m，69~103.6in·lb）

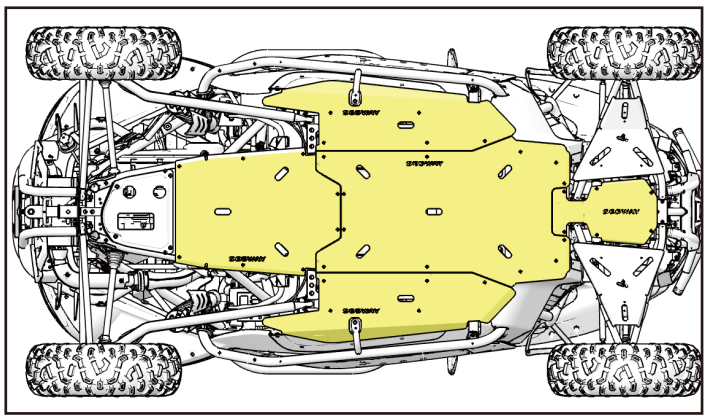

TIPS

There is no order of installation.