Accessory installation guide

This manual provides instructions on the installation of the packing parts of the 1000SSV fuel series vehicle. Please select the corresponding accessories according to the vehicle.

Before assembly, read the installation guide and inventory the parts and tools required for assembly. Please keep the installation guide for future reference and ordering optional parts, which can be ordered on the Segway website

Before installation:

Place the vehicle on a flat surface.

Stop the engine.

Turn the ignition lock key to the "OFF" position and remove the key

VILLAIN ALUMINUM SKID PLATE(72”)

VILLAIN ALUMINUM SKID PLATE（72″）

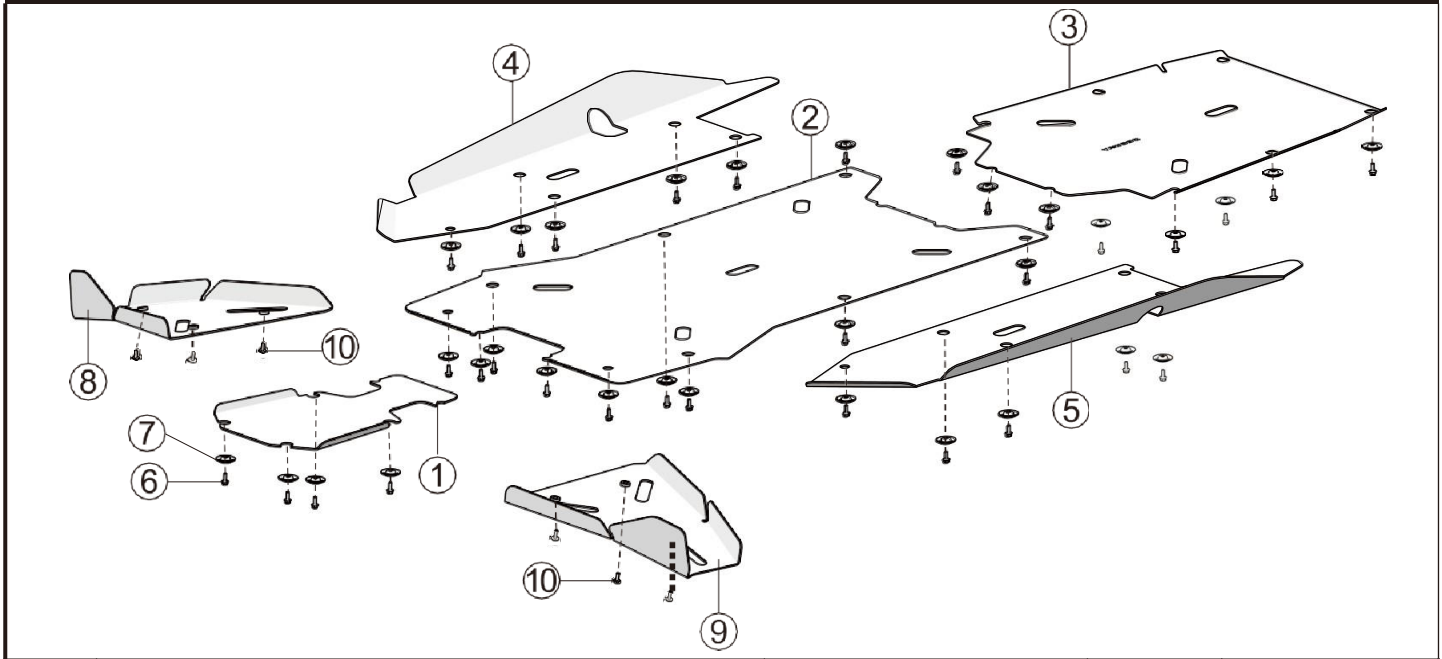

NO.	Part name	Part number	QTY	Vehicle
1	Chassis front guard	S01R10110001	1	SSV
2	Chassis center guard	S01R10120001	1	SSV
3	Chassis rear guard	S01R10150001	1	SSV
4	Right side shield of the chassis	S01R10140001	1	SSV
5	Left side shield of the chassis	S01R10130001	1	SSV
6	Hexagon flange bolt M6 × 16	GBT005789007	32	
7	cup washer	U01R10001001	32	
8	FR lower rocker arm guard (72 ")	S05R10170001	1	(72")
9	RL lower rocker arm guard (72 ")	S05R10160001	1	(72")
10	Large pan head hexagonal bolt M6 × 20	T03000007001	6	

1. The front left (right) rocker arm bottom guard plate is fixed with large disk head hexagon bolt M6x16, torque value: 8~12N·m (0.8~1.2kgf·m, 69~103.6in·lb)

2. Fix the chassis protection plate with hexagonal flange bolts M6x16 and washers, and the torque value is 8~12N·m (0.8~1.2kgf·m).

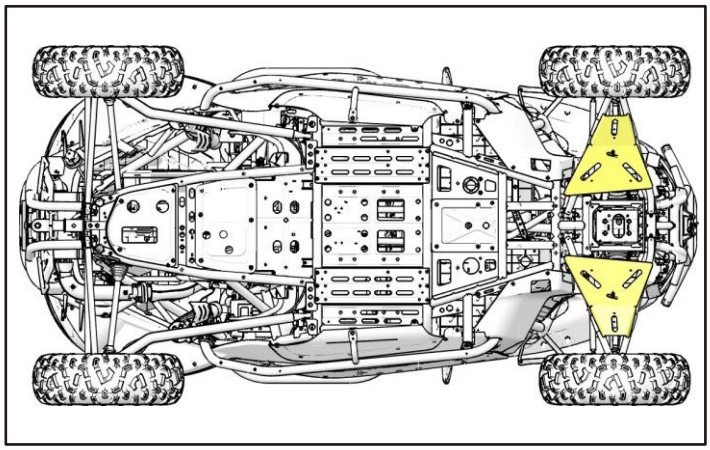

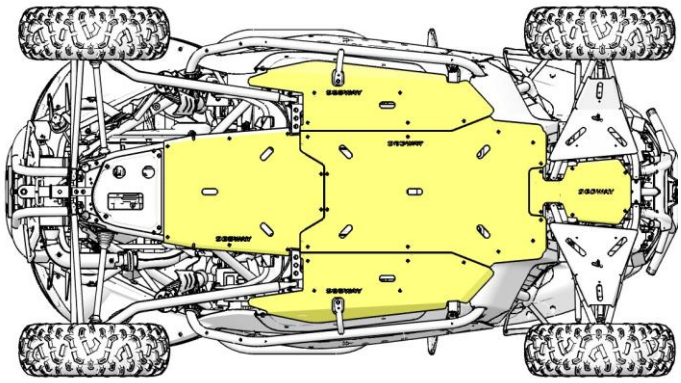

TIPS
No sequence during installation

VILLAIN ALUMINUM SKID PLATE(64”)

VILLAIN ALUMINUM SKID PLATE(64”)

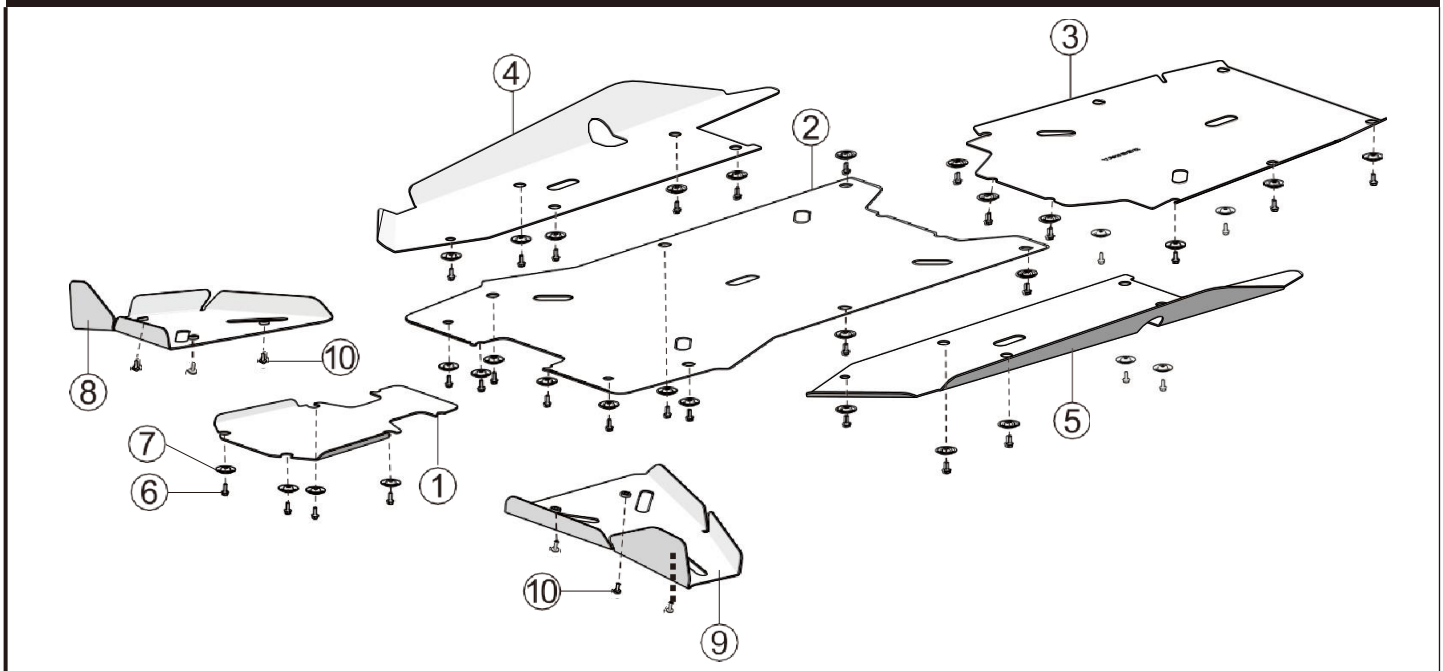

NO.	Part name	Part number	QTY	Vehicle
1	Chassis front guard	S01R10110001	1	SSV
2	Chassis center guard	S01R10120001	1	SSV
3	Chassis rear guard	S01R10150001	1	SSV
4	Right side shield of the chassis	S01R10140001	1	SSV
5	Left side shield of the chassis	S01R10130001	1	SSV
6	Hexagon flange bolt M6 × 16	GBT005789007	32	
7	cup washer	U01R10001001	32	
8	FR lower rocker arm guard (72 ")	S01R10170001	1	(64")
9	RL lower rocker arm guard (72 ")	S01R10160001	1	(64")
10	Large pan head hexagonal bolt M6 × 20	T03000007001	6	

1. The front left (right) rocker arm bottom guard plate is fixed with large disk head hexagon bolt M6x16, torque value: 8~12N·m (0.8~1.2kgf·m, 69~103.6in·lb)

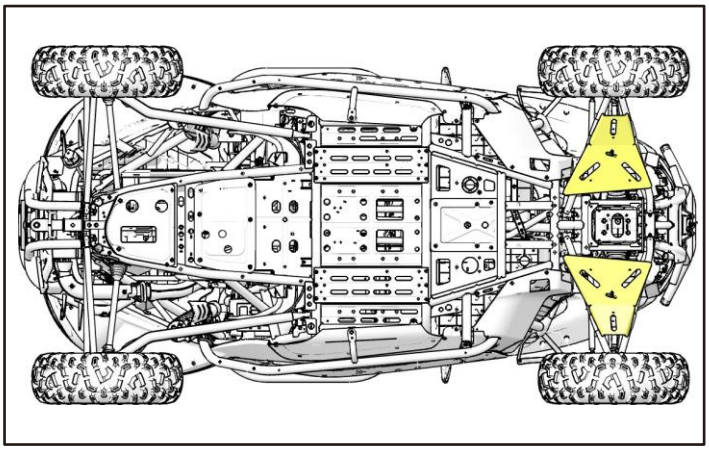

2. Fix the chassis protection plate with hexagonal flange bolts M6x16 and washers, and the torque value is 8~12N·m (0.8~1.2kgf·m).

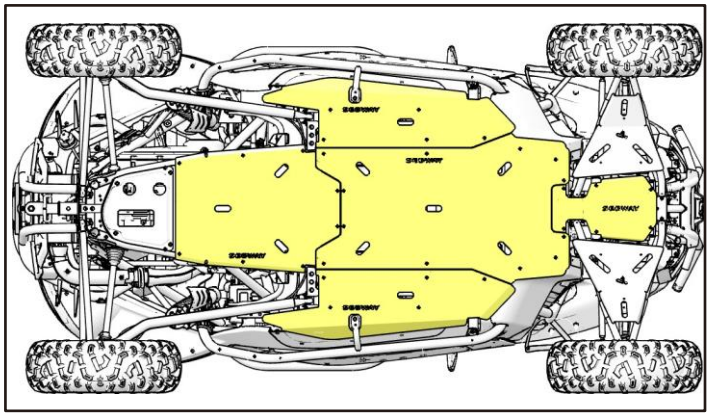

TIPS
No sequence during installation

Front half windshield

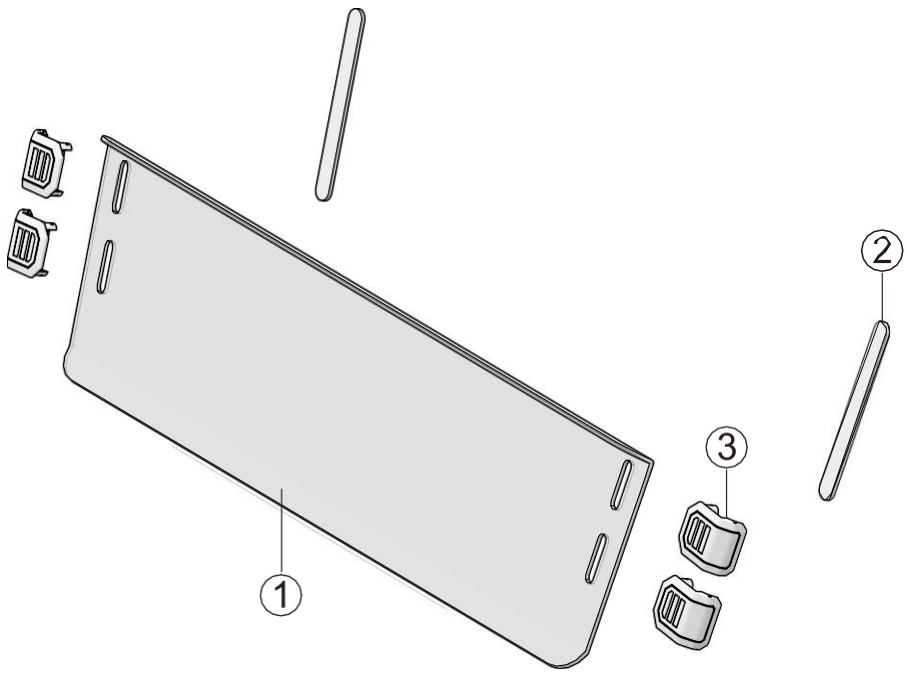

NO.	Part name	Part number	QTY	Vehicle
1	Half windowshield	S01R20101002	1	
2	Half block buffer	S01R20104001	2	
3	Glass quick strap	S01R20103001	4	

1.Remove the protective film on both sides of the front half screen

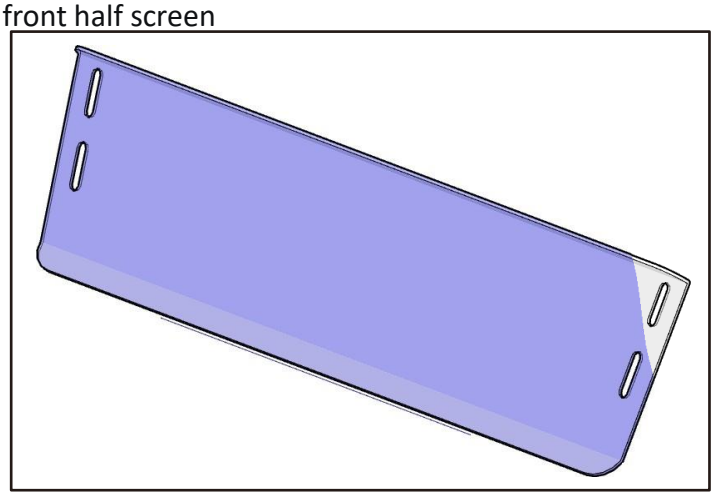

TIPS
Remove the glass from the protective mold and take care not to scratch it

2. Remove the rubber protective film from the buffer block and affix the buffer block to both sides of the baffle glass

TIPS
When pasting, pay attention to pasting the surface, so as not to stick it backwards

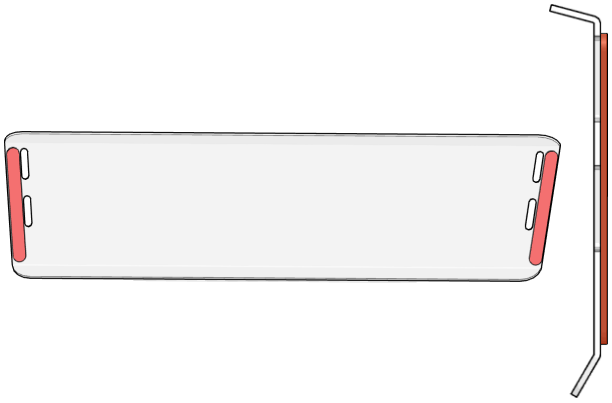

3.Place the half baffle glass in a suitable position on the left (right) side pipe of the top beam of the vehicle.

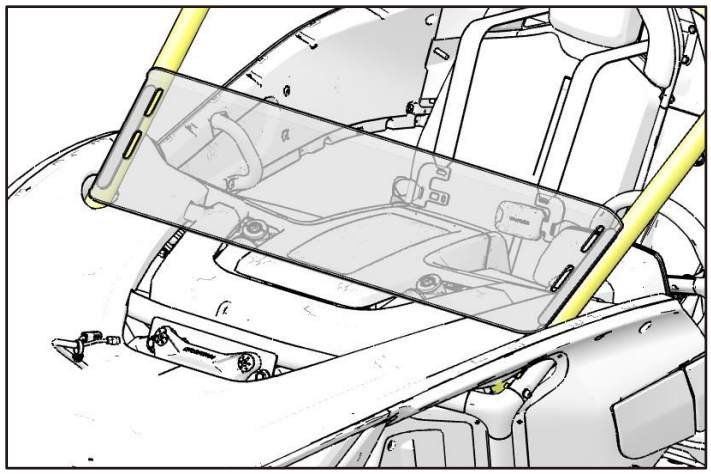

4.Fix the half stop on the left (right) side tube of the top beam with four pieces of glass quick binding

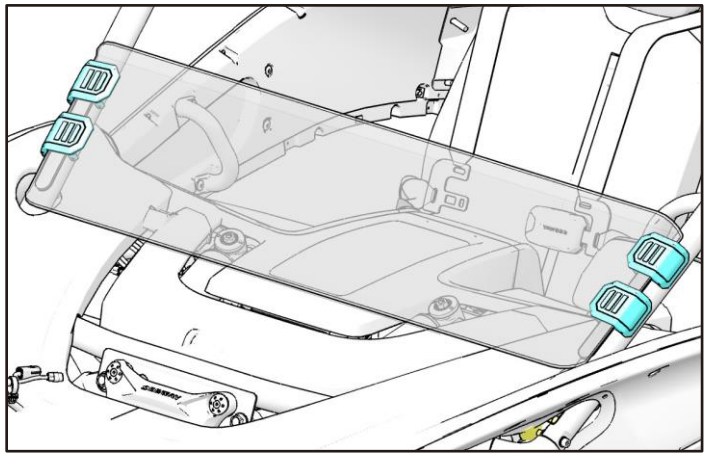

Front and rear fenders（72"）

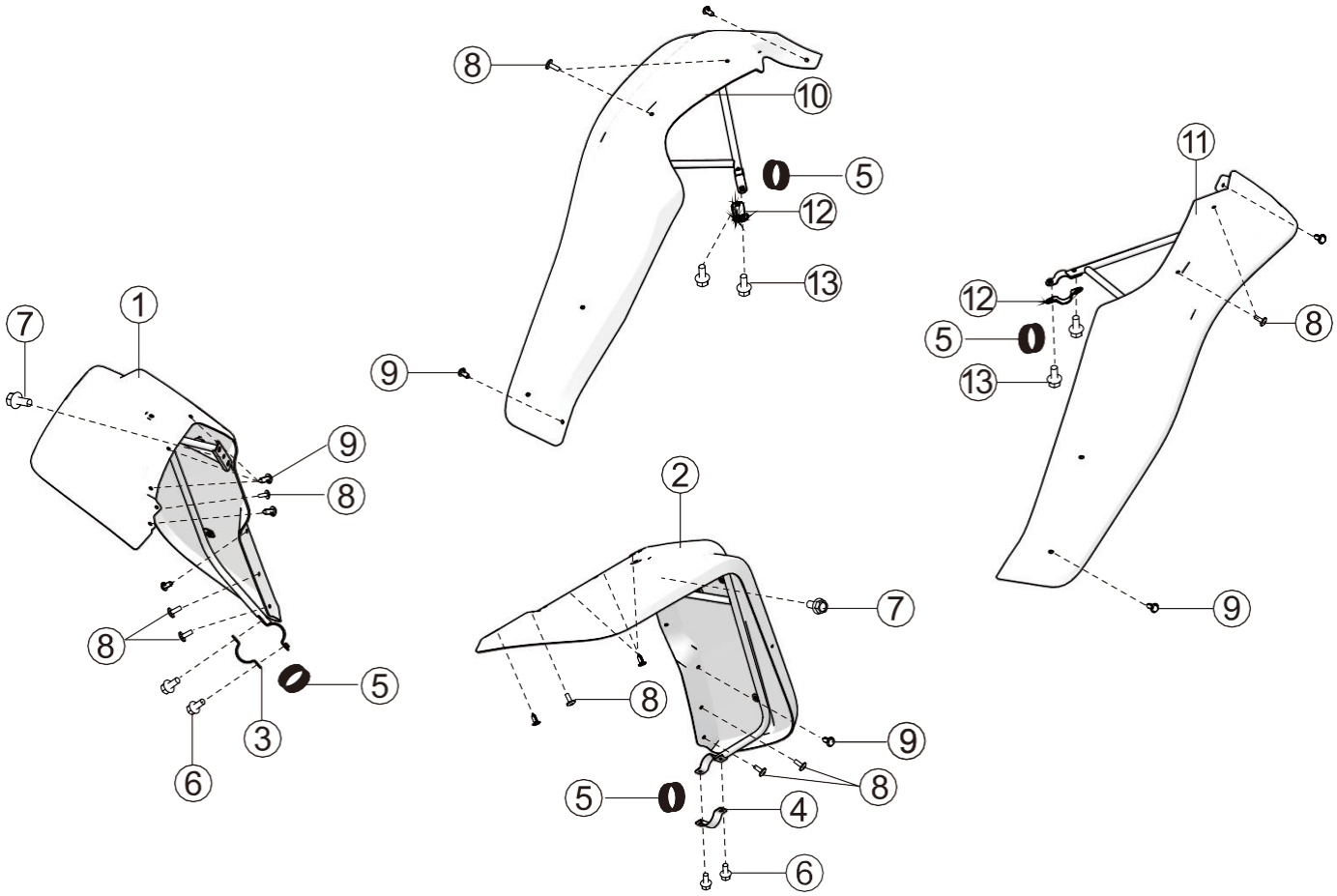

NO.	Part name	Part number	QTY	Vehicle
1	FR FENDER(WIDE)		1	SSV 72"
2	FL FENDER(WIDE)		1	SSV 72"
3	FR FENDER CLAMP		1	
4	FL FENDER CLAMP		1	
5	FRONT FENDER CLAMP PAD		2	
6	Hexagon flange bolts M6×16		4	
7	Hexagon flange bolt M8×16(black)		2	
8	Large pan head hexagon bolt M6x20	T03000007002	14	
9	Expansion buckle	T04000003001	20	
10	RR FENDER(WIDE)		1	SSV 72"
11	RL FENDER(WIDE)		1	SSV 72"
12	Rear fender hoop			
13	Hexagonal flange bolt M8×16		2	

Front and rear fenders（64"）

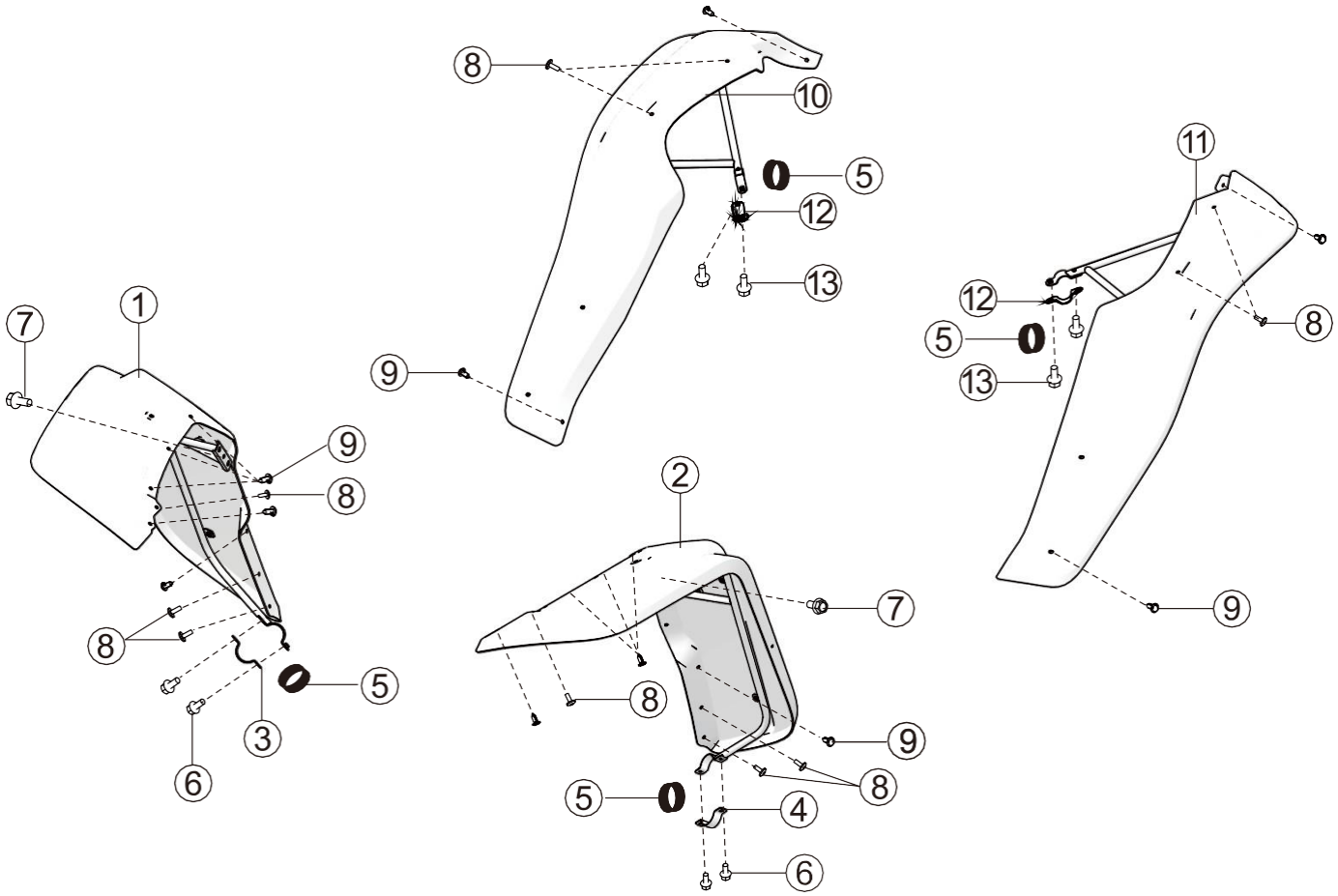

NO.	Part name	Part number	QTY	Vehicle
1	FR FENDER(NARROW)		1	SSV 64"
2	FL FENDER(NARROW)		1	SSV 64"
3	FR FENDER CLAMP		1	
4	FL FENDER CLAMP		1	
5	FRONT FENDER CLAMP PAD		2	
6	Hexagon flange bolts M6×16		4	
7	Hexagon flange bolt M8×16(black)		2	
8	Large pan head hexagon bolt M6x20	T03000007002	14	
9	Expansion buckle	T04000003001	20	
10	RR FENDER(NARROW)		1	SSV 64"
11	RL FENDER(NARROW)		1	SSV 64"
12	Rear fender hoop			
13	Hexagonal flange bolt M8×16		2	

Front and rear fenders

TIPS

The 72 "and 64" installation methods are the same

1. Remove the hexagonal flange bolt M8, which is fixed on the A-pillar decorative plate, and remove the A-pillar decorative plate if the bolt is no longer used.

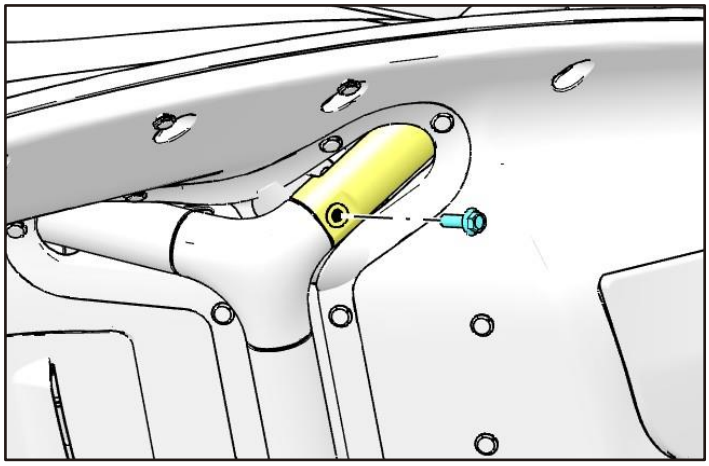

2. Place the front fender assembly in the appropriate position on the vehicle to be installed, and remove the three bolts that coincide with the front fender mounting holes.

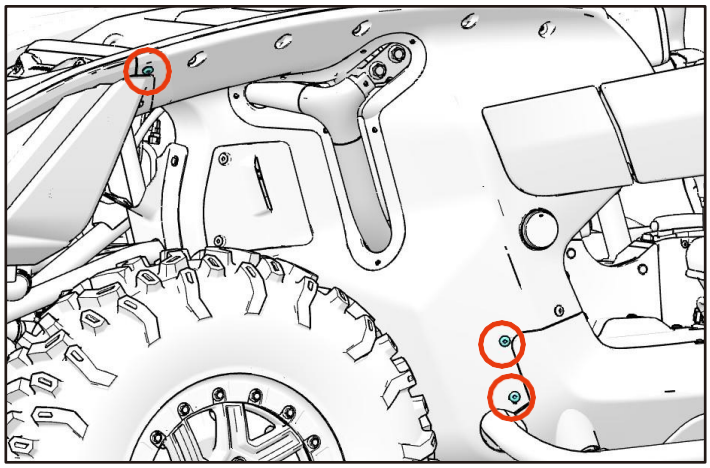

3. Place the front fender assembly on the appropriate position of the vehicle to be installed, surround the guard head under the fender assembly, and place a buffer rubber pad in the hoop under the front fender assembly.

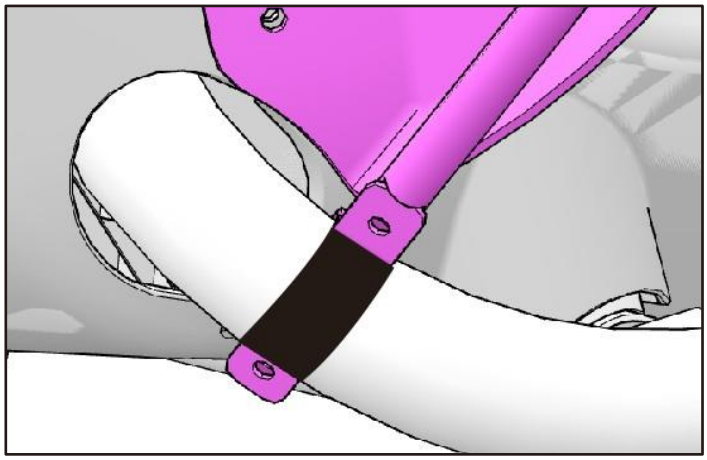

4. Secure the front fender to the vehicle using three large pan head hexagon bolts M6x20, and secure the remaining mounting holes of the fender to the corresponding mounting holes of the vehicle using expansion buckle components.

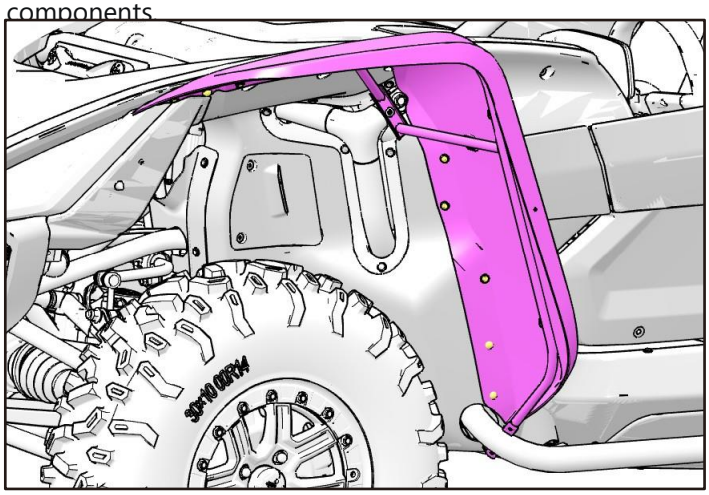

5. Use hexagon flange bolts M8×16(black) to fix the fender assembly to the corresponding holes on the frame, do not tighten completely.

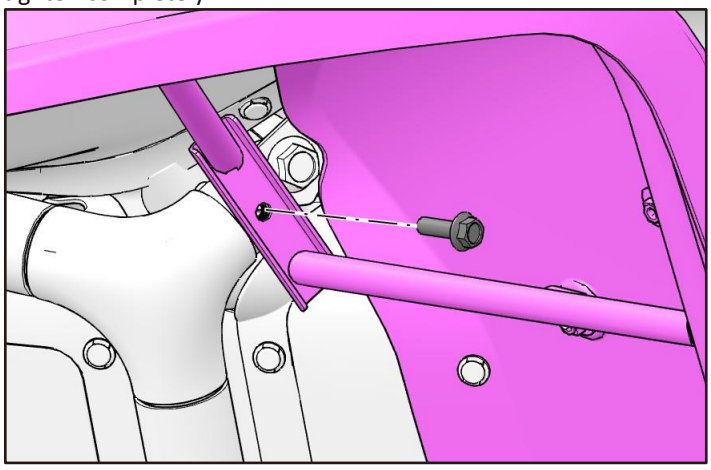

6. Align the fender hoops (left and right) with the mounting holes under the fender assembly, and secure the fender hoops and fender assembly using two flange screws M6x16.

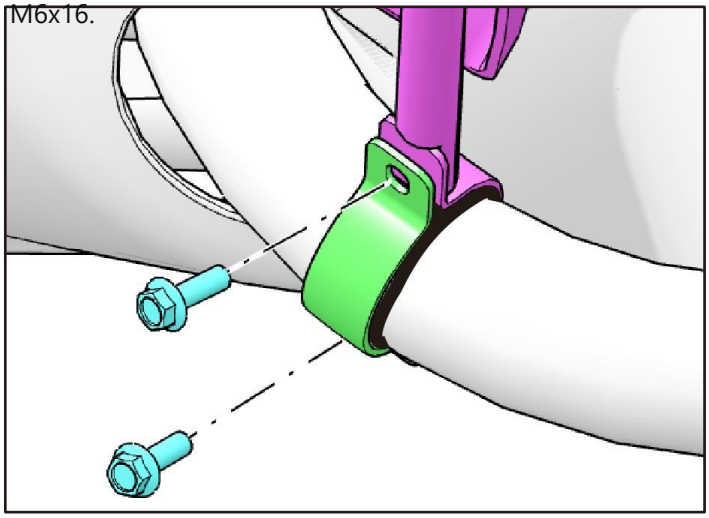

7. 将所有紧固件拧紧。螺栓M8：30~40N·m（3.0~4.0kgf·m，22.1~29.5ft·lb）

TIPS

The 72 "and 64" installation methods are the same.

1. Place a rubber cushion on the appropriate position of the rear fender installation pipe, and place the end of the rear fender assembly hoop on the rubber cushion.

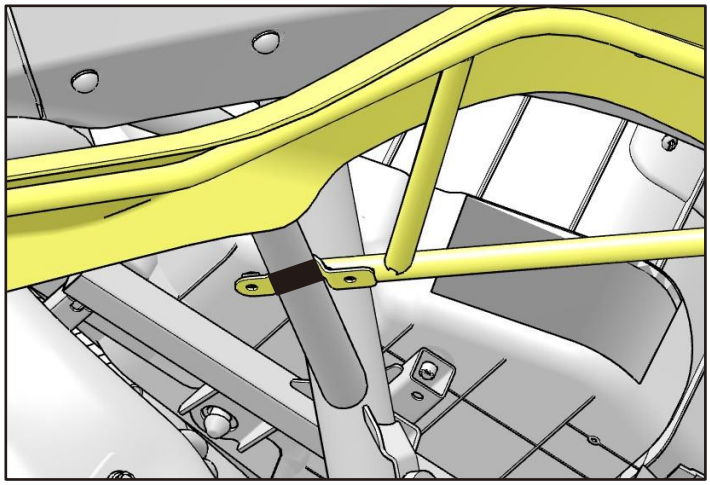

2. Align the rear fender hooping with the mounting holes above the rear fender assembly, and secure the fender assembly to the transverse pipe on the frame using two flange bolts M6x16. Do not tighten the bolts first.

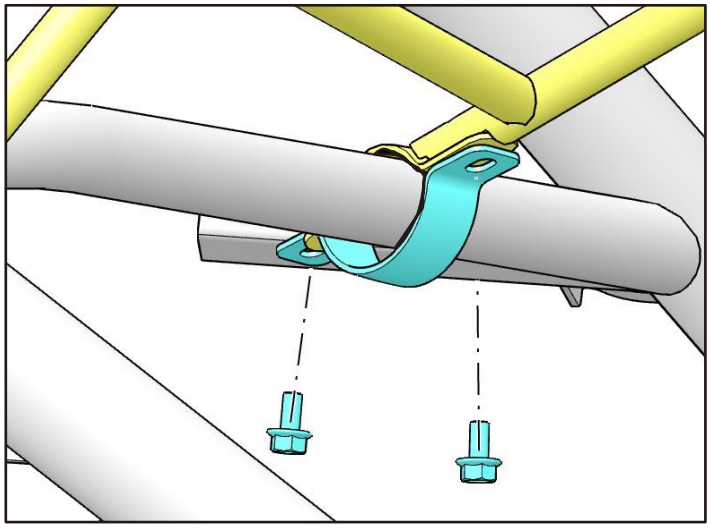

3. Secure the front fender to the vehicle using three large pan head hexagon bolts M6x20, and secure the remaining mounting holes of the fender to the corresponding mounting holes of the vehicle using expansion buckle components.

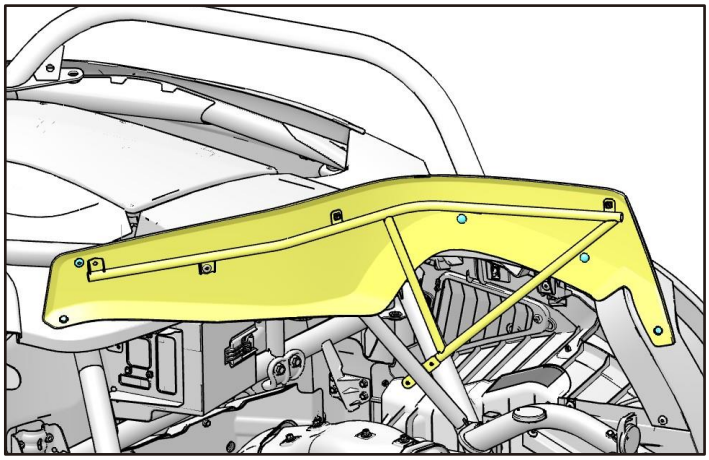

VILLAIN FULL WINDSHIELD

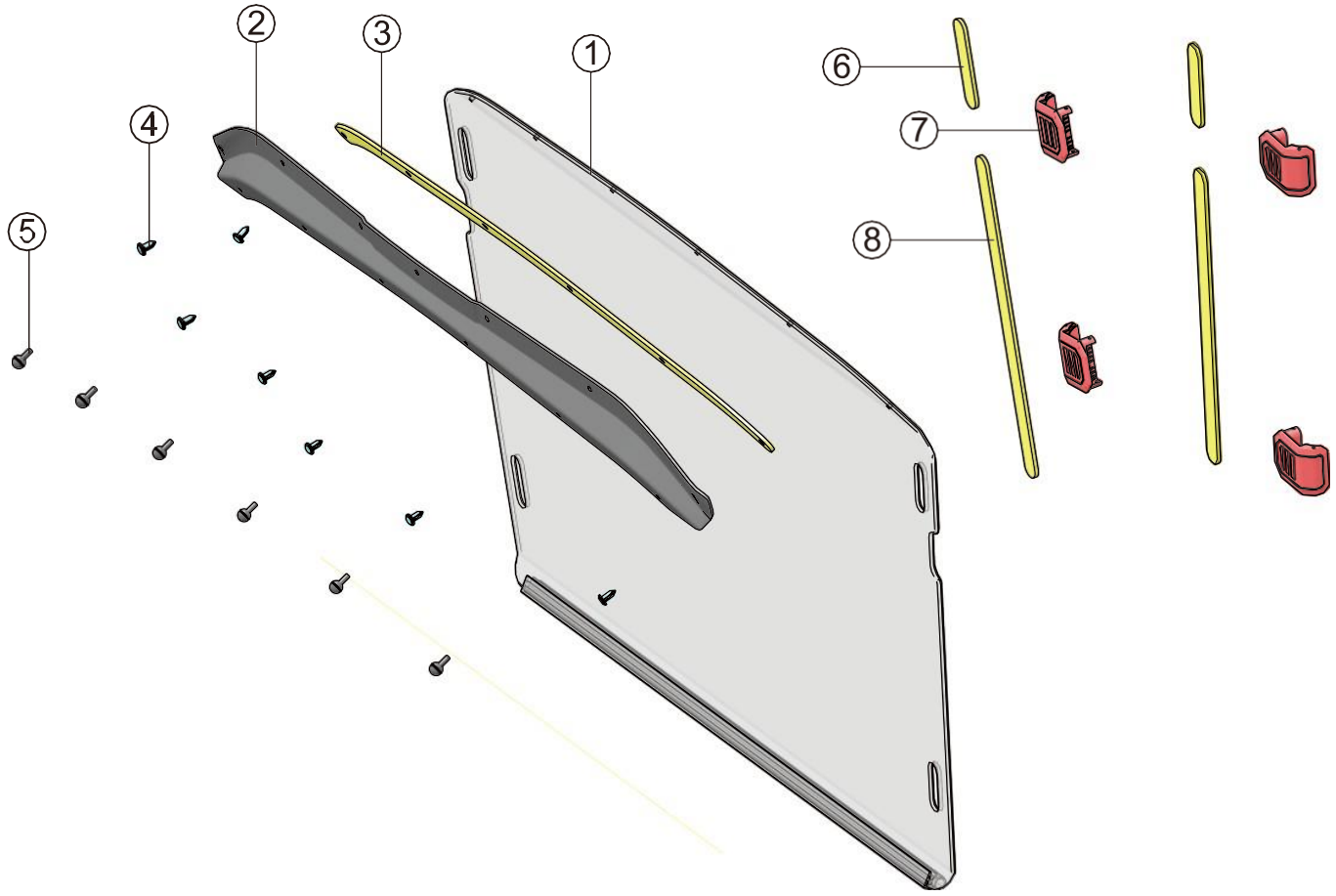

Serial number	Part name	Part number	quantity	Applicable vehicle type
1	Front windshield		1	
2	Windshield connection plate		1	
3	Buffer block on windshield		1	
4	Expansion buckle group	T04000003001	7	
5	Large pan head hexagon bolt M6x20	T03000007001	6	
6	The SSV fully blocks the upper buffer blocks		2	
7	Glass quick strap	S01R20103001	4	
8	SSV full side buffer block			

Front full windshield mounted

TIPS
Pay attention to protect the surface of the glass during installation to avoid scratching

1. Place the full windshield assembly in the appropriate position on the left (right) side pipe of the top beam of the vehicle.

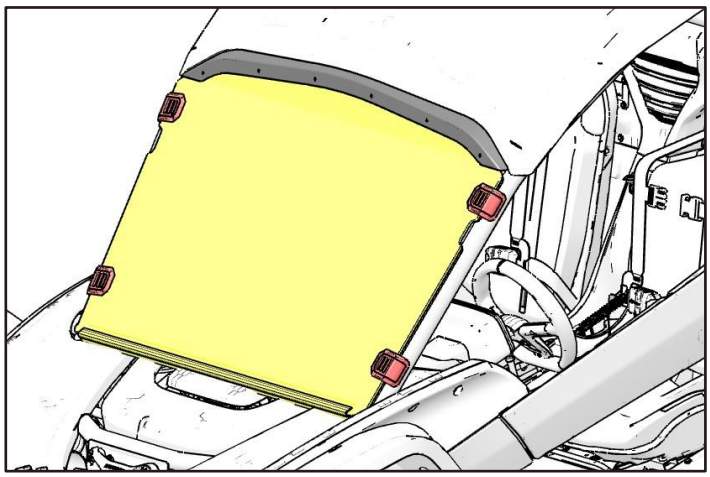

2. Tighten the four pieces of glass quick binding to fix the full glass baffle assembly to the top beam side pipe.

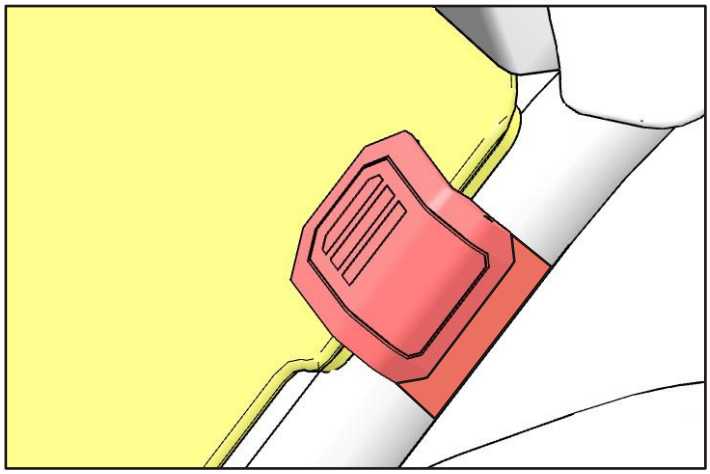

3. Use an electric drill to drill holes corresponding to the connecting plate on the windshield and the ceiling.

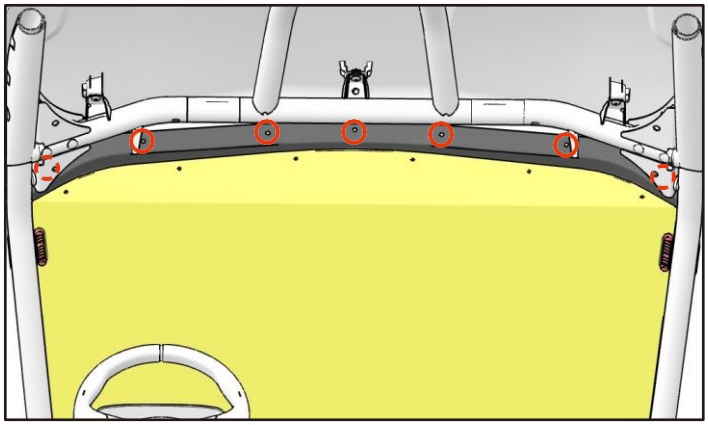

4. Secure the connecting plate on the windshield to the ceiling using an expansion buckle.

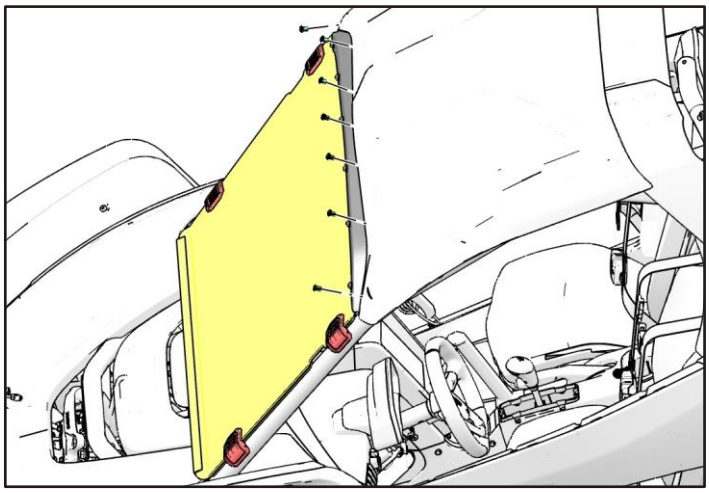

Turn signal kit

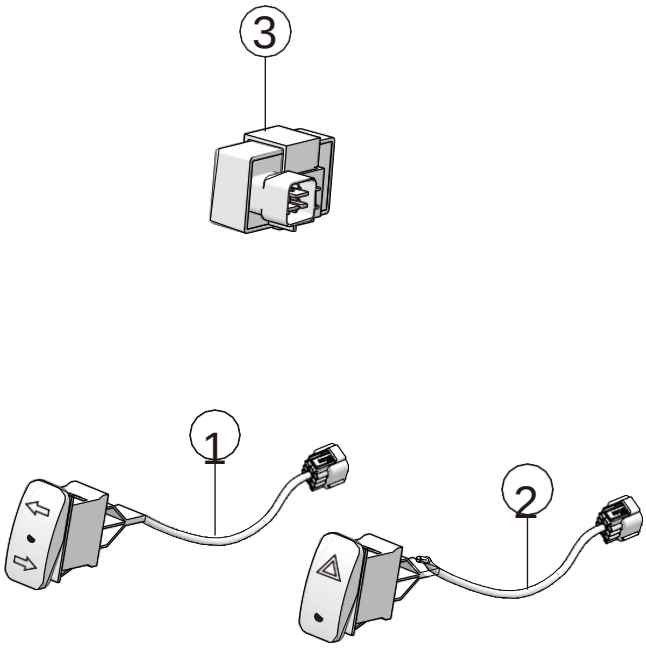

Serial number	Part name	Part number	quantity	Applicable vehicle type
1	Turn signal switch		1	SSV
2	Emergency switch		1	SSV
3	flasher		1	SSV

Turn signal control assembly

Install emergency switch and steering switch

1. Remove the 2 switch plug cover from the front instrument panel.

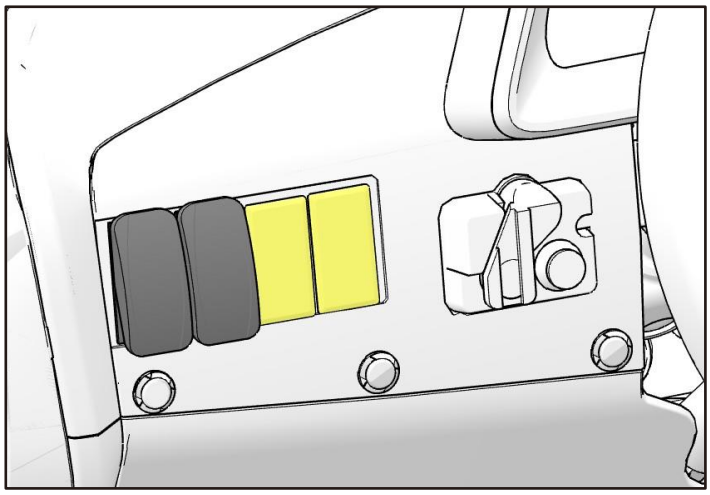

2.Remove the three-piece expansion buckle assembly from the lower left corner of the instrument panel.

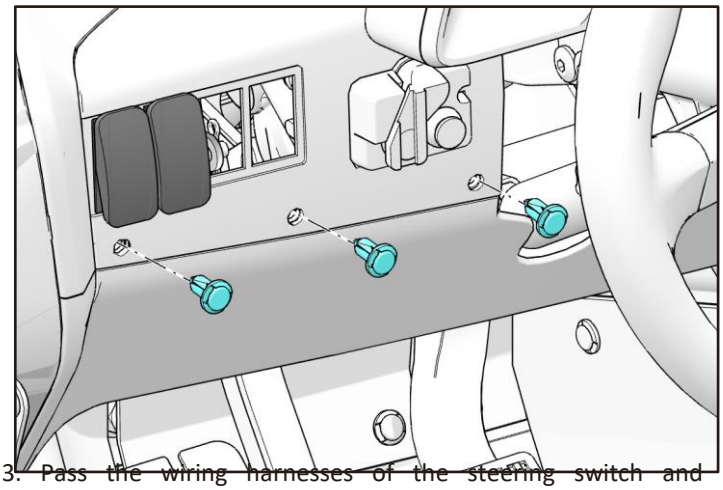

3. Pass the wiring harnesses of the steering switch and emergency switch through the mounting holes under the instrument panel, lift the instrument panel upward, and connect the wiring harnesses connector of the switch to the wiring harnesses connector reserved on the vehicle.

TIPS

The two plugs reserved on the vehicle can be connected to the steering or emergency regardless of steering or emergency.

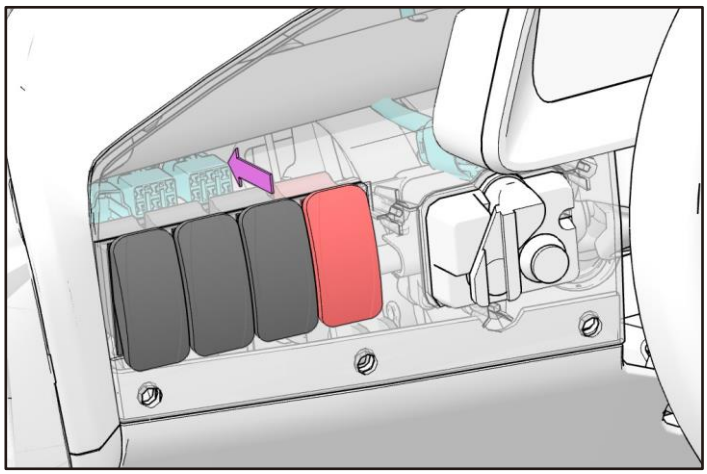

Scintillator mounting

1. Remove the fastener from the front right fender and the front left fender.

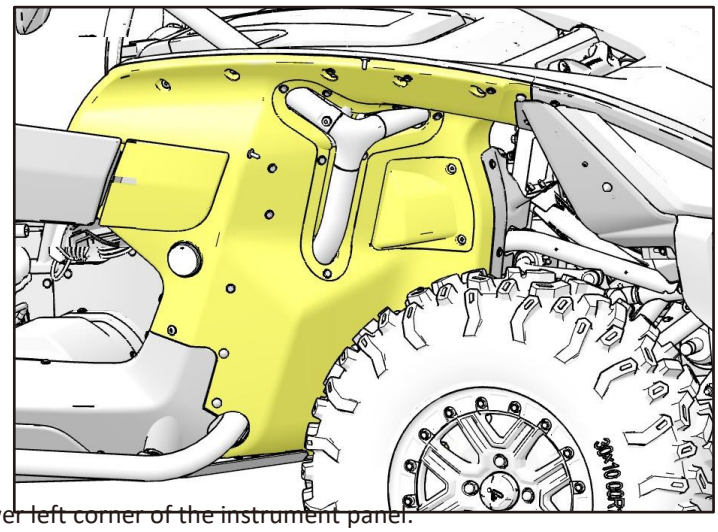

2.Locate the reserved connector for the scintillator on the vehicle and connect the scintillator to the reserved connector on the vehicle.

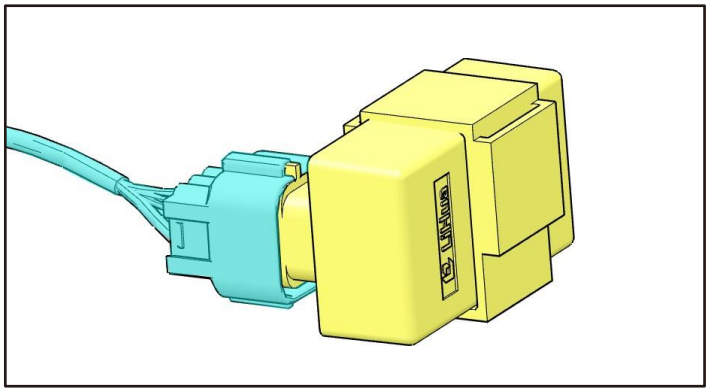

3. Insert the scintillator into the corresponding fixed lug on the vehicle.

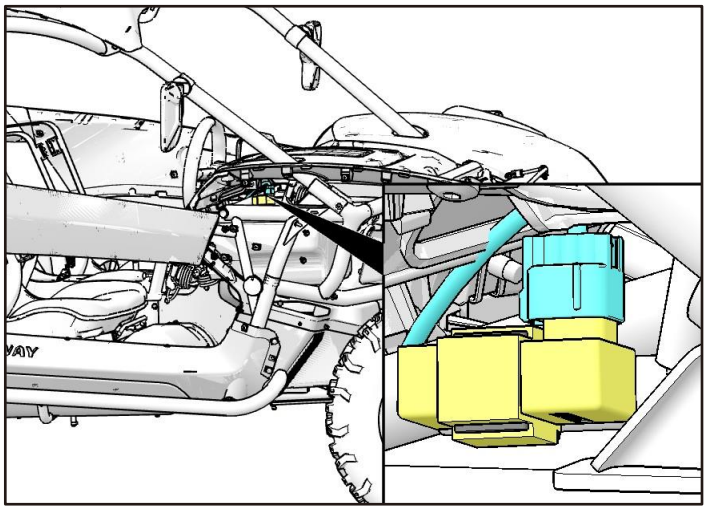

4. Switch on the vehicle power supply and test the installed turn signal control component. After passing the test, install the removed instrument panel and front right fender in turn.

VILLAIN HEAVY-DUTY FRONT BUMPER

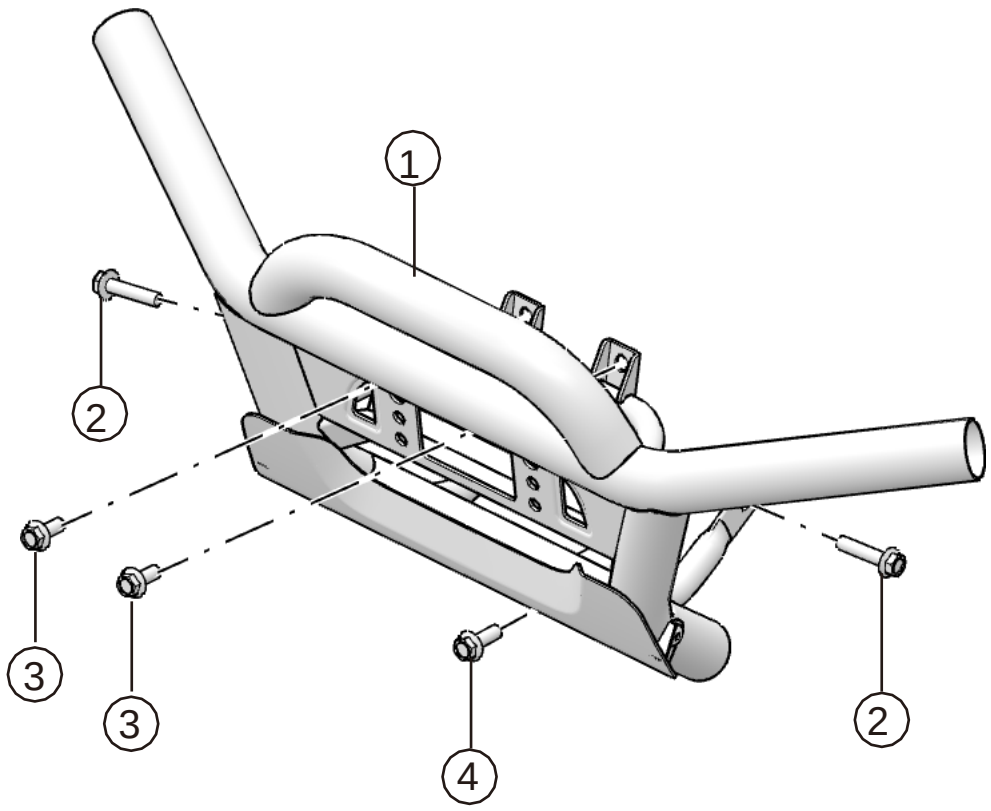

Serial number	Part name	Part number	quantity	Applicable vehicle type
1	Front bumper	S01-R001110-000-00	1	SSV
2	Hexagonal flange bolts M10×1.25×45	GBT005789030	2	
3	Hexagonal flange bolts M10×1.25×25	GBT005789026	2	
4	Hexagon flange bolt M10×1.25×30 (10.9)	GBT005789027	1	

1. Remove the existing bumper from the vehicle.

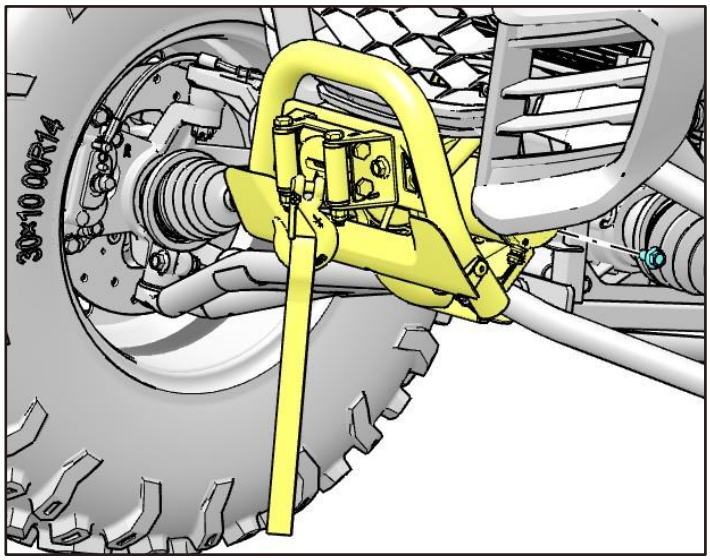

2. If a winch is installed, remove the winch assembly from the safety on the original bumper and unplug the cable connector on the winch motor

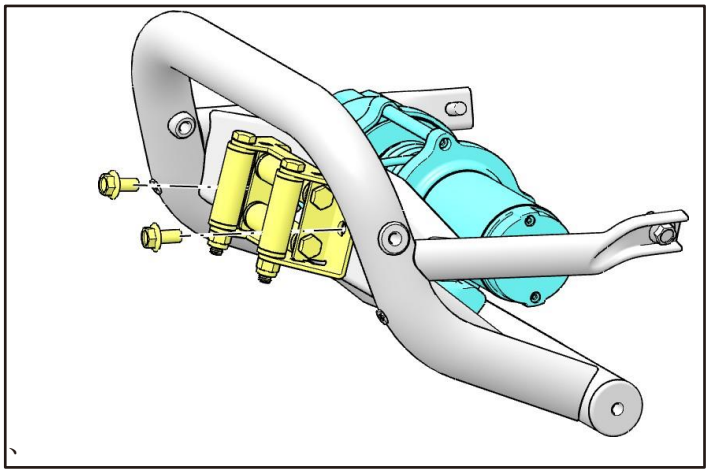

3. Install the winch assembly on the new bumper.

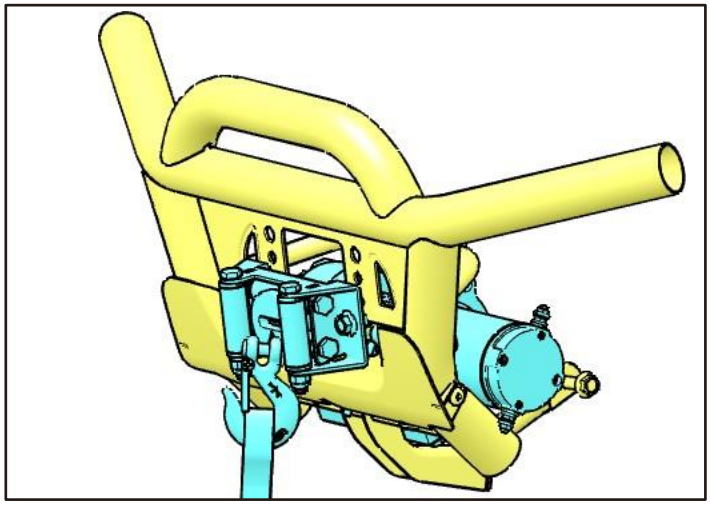

4. Install the new bumper combination in the corresponding hole position of the vehicle. Tighten the bolts.

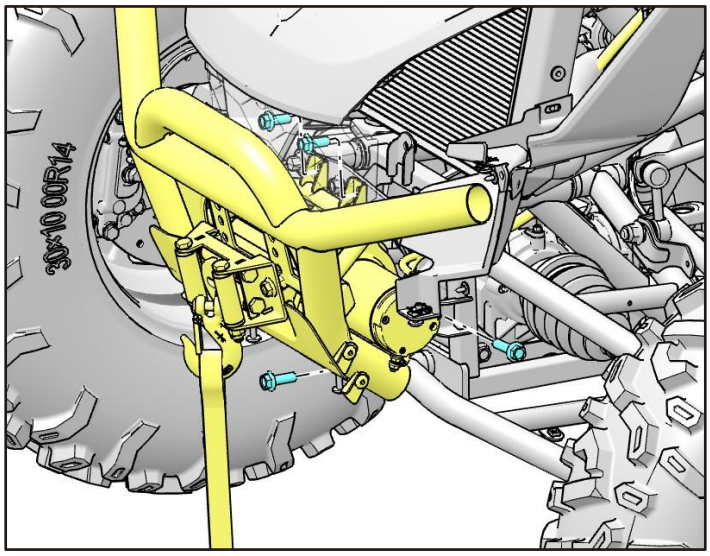

5. Connect the positive and negative terminals of the winch motor at the other end of the winch motor line.

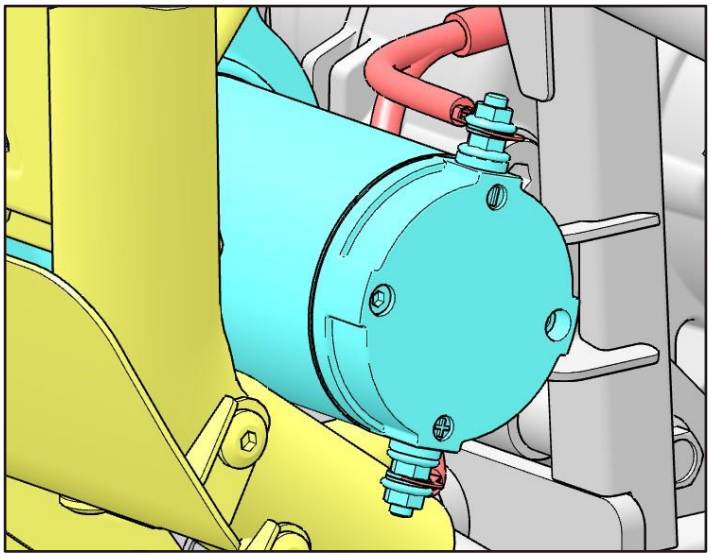

VILLAIN HEAVY-DUTY REAR BUMPER

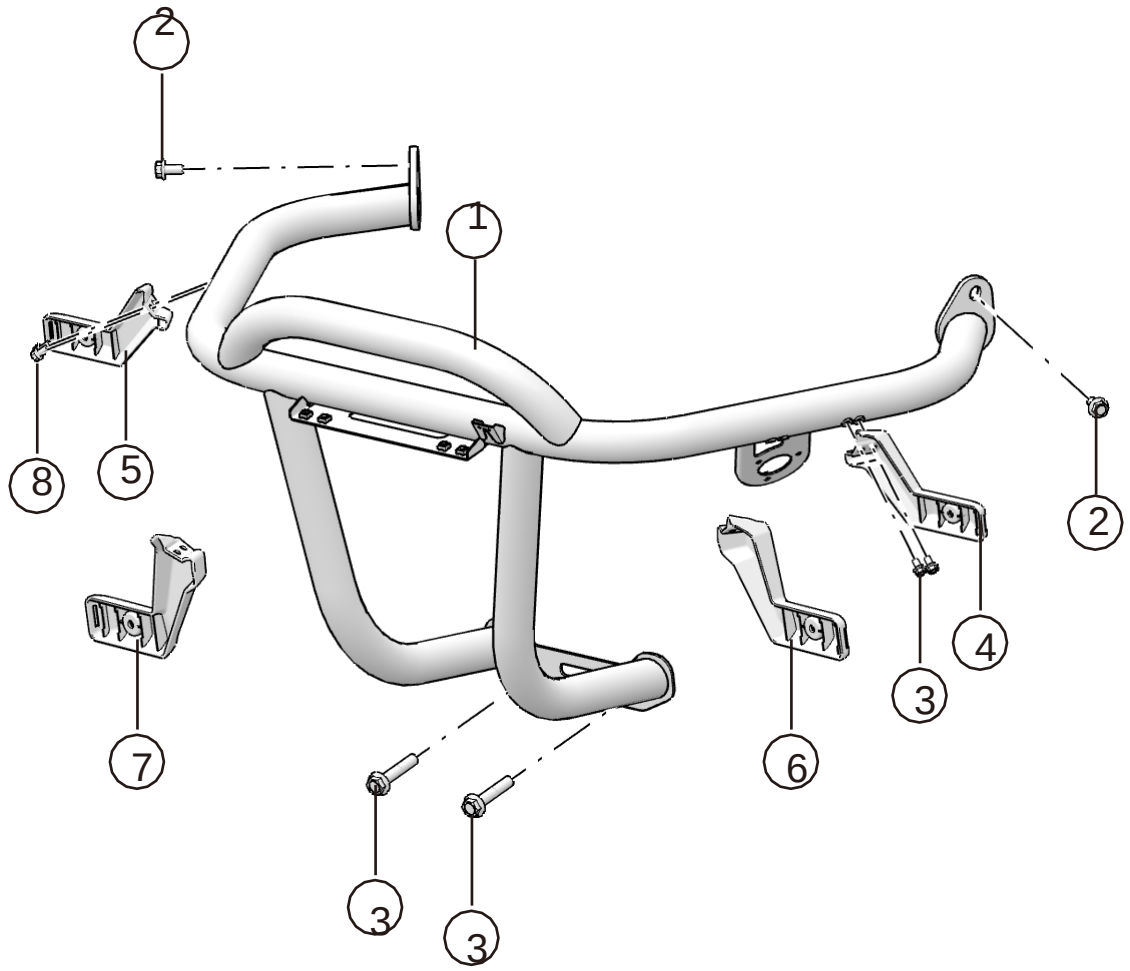

Serial number	Part name	Part number	quantity	Applicable vehicle type
1	Rear bumper		1	SSV
2	Hexagonal flange bolts M10×1.25×20	GBT005789025	2	
3	Hexagonal flange bolts M12×1.25×65	GBT005789048	2	
4	Rear right reflector mount (wide)		1	SSV 72″
5	Rear left reflector mount (wide)		1	SSV 72″
6	Rear right reflector support (narrow version)		1	SSV 64"
7	Rear left reflector mount (wide)		1	SSV 64"
8	Hexagon flange bolts M6x12	GBT005789006	4	

1.Place the vehicle on the original rear guard on the trailer power supply (if equipped), reflection

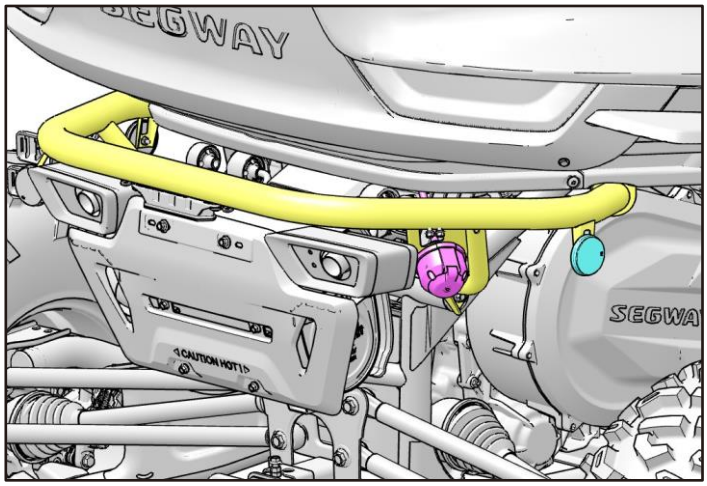

2. Remove the original rear bumper.

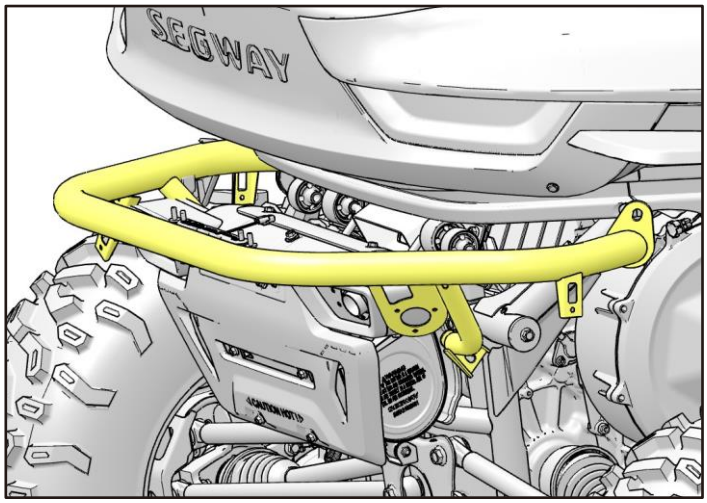

3. Install the new rear guard bar combination on the corresponding installation position. And tighten all fasteners.

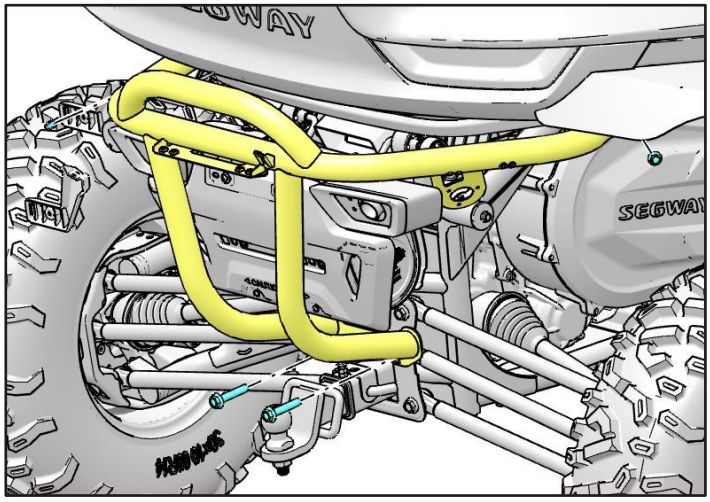

4.Remove the removed application power supply (if equipped) by reinstalling it in a new rear guard, etc. On the bars.

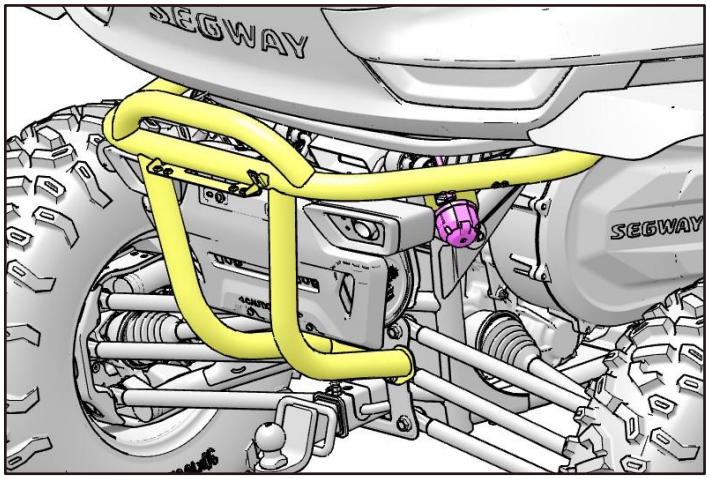

5. Install the left (right) reflector support on the rear bumper.

TIPS
The installation positions of the 72 "and 64" vehicle reflector supports are different, the 72 "vehicle reflector supports are installed in the front 2 mounting holes, and the 64" vehicle reflector supports are installed in the rear 2 mounting holes.

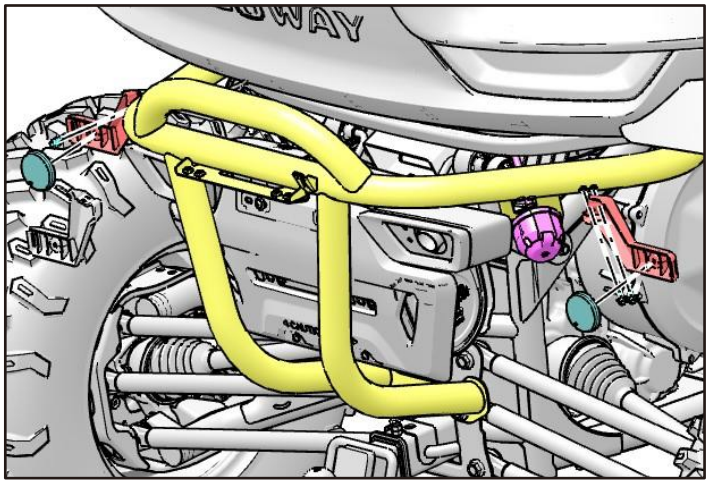

VILLAIN SPARE TIRE MOUNT

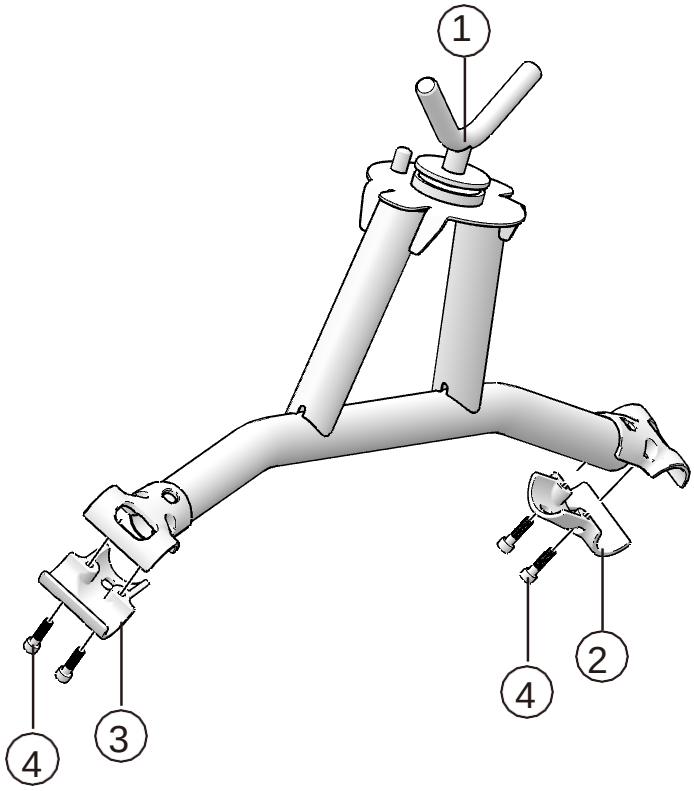

Serial number	Part name	Part number	quantity	Applicable vehicle type
1	Spare tire support welded assembly		1	SSV
2	Hoop 1		1	SSV
3	Hoop 2		1	SSV
4	Hexagonal cylindrical head screw M8×30	GBT000701029	4	

1. Install the welding assembly of the spare tire support on the side pipe of the (left) right top beam.

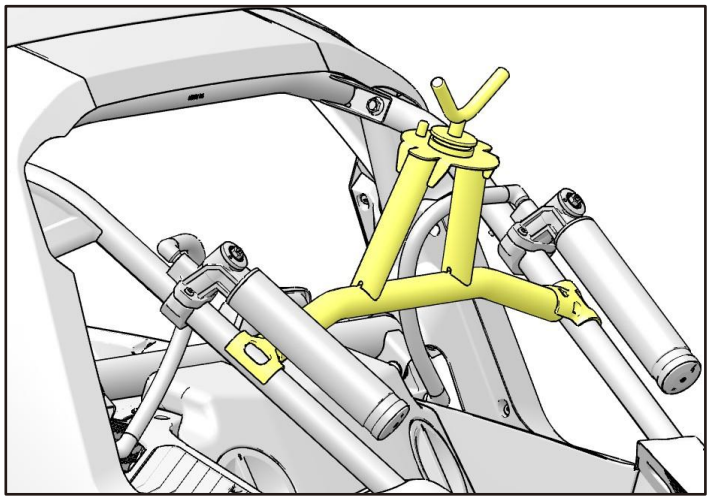

2. Secure hoop 1, hoop 2, and the welded components of the spare tire support using a hex socket cylindrical head screw M8×30.

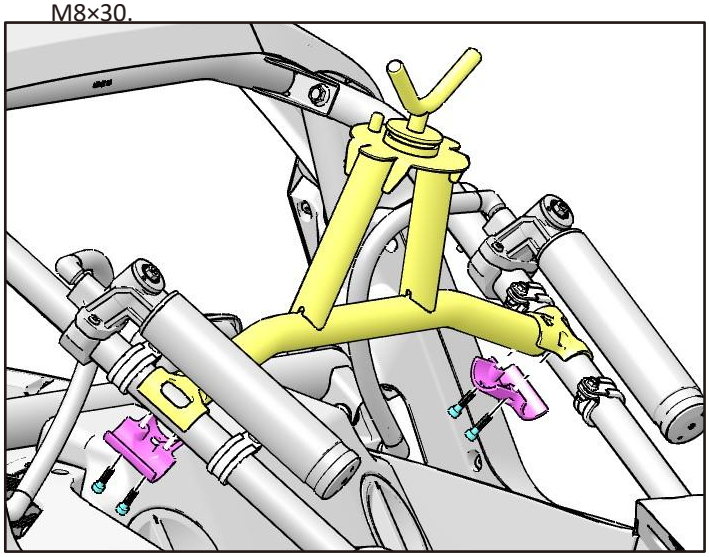

ROCK SLIDERS - VILLAIN(without adapter bracket)

ROCK SLIDERS - VILLAIN

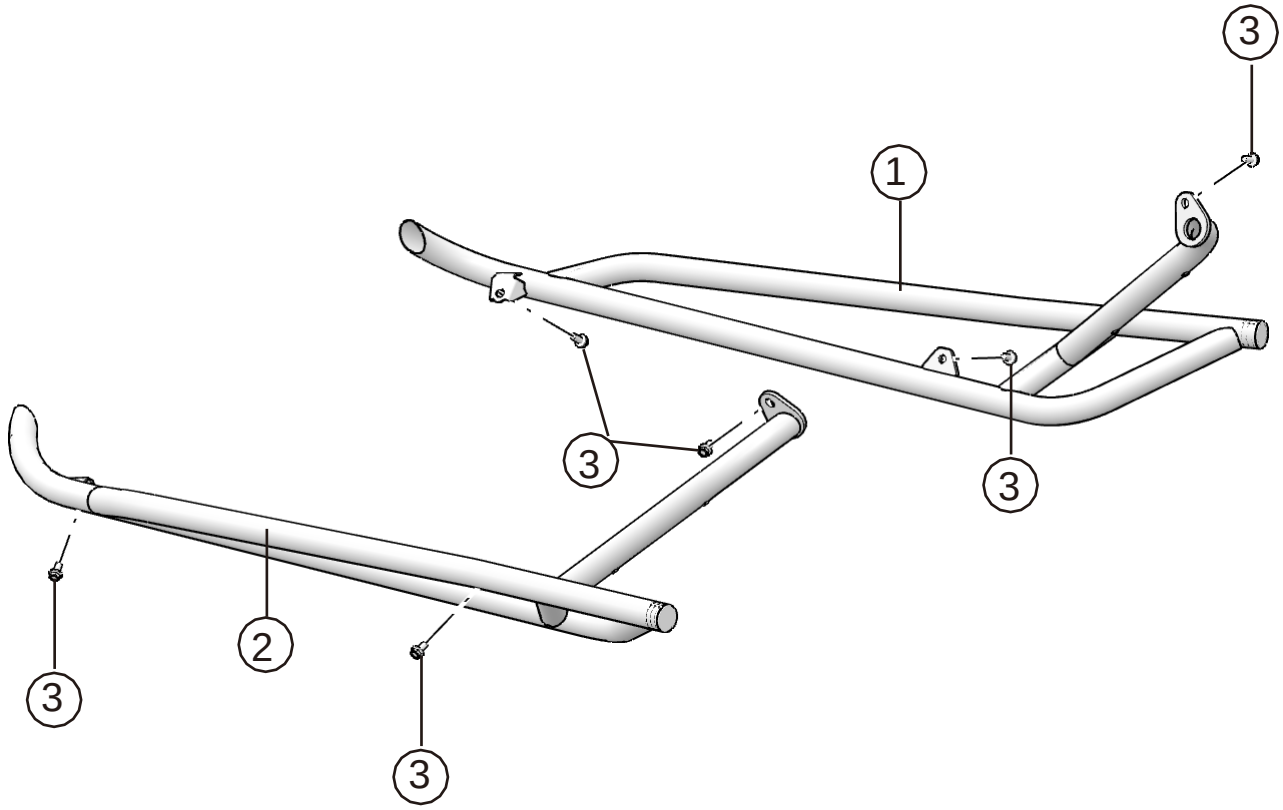

Serial number	Part name	Part number	quantity	Applicable vehicle type
1	Right guard bar		1	SSV
2	Left guard bar		1	SSV
3	Hexagonal flange bolts M10×1.25×20	GBT005789025	6	

1. Remove the original left (right) bumper of the vehicle.

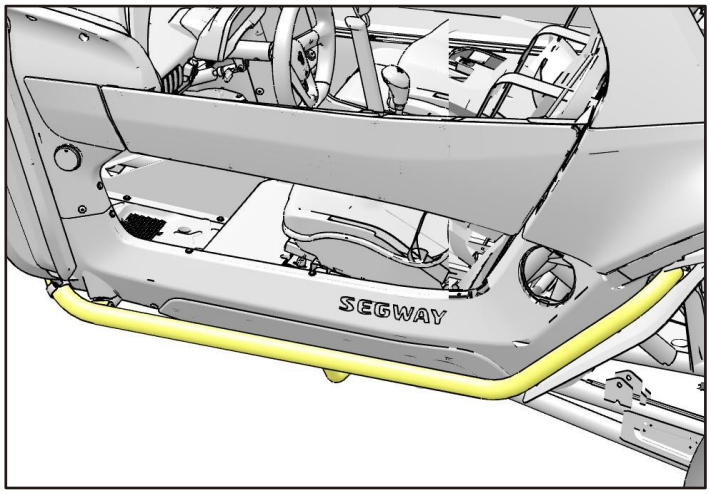

2. Secure the new left and right guard bars.

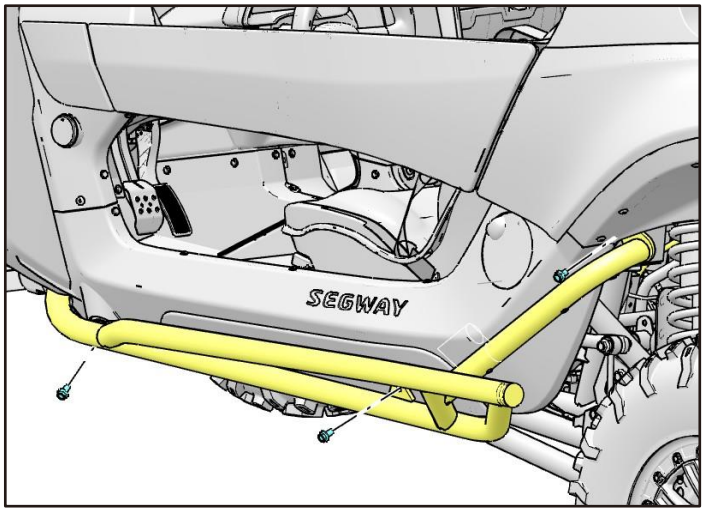

Rock sliders Villain(with adapter bracket)

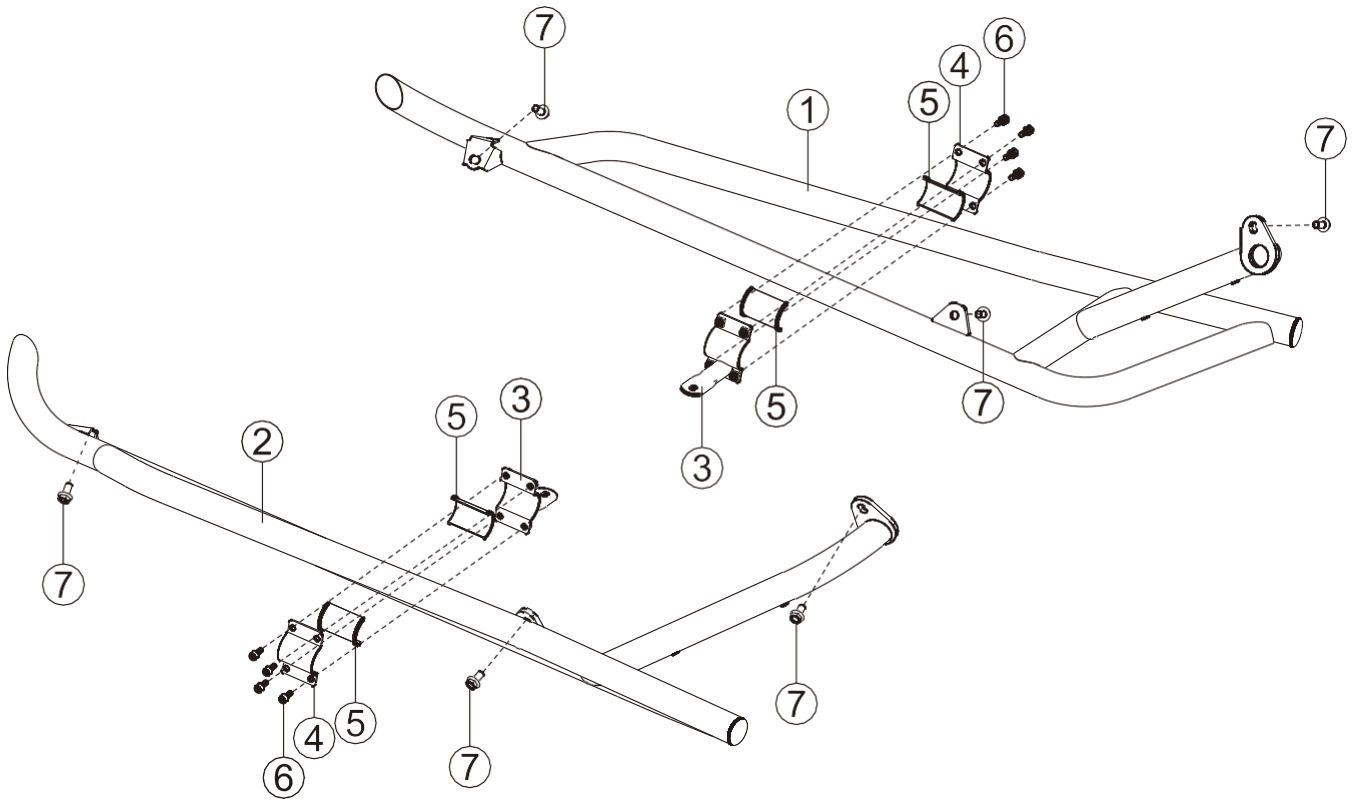

Serial number	Part name	Part number	quantity	Applicable vehicle type
1	Right guard bar		1	SSV
2	Left guard bar		1	SSV
3	Guard adapter bracket welded assembly		2	SSV
4	Guard bar transfer bracket		2	SSV
5	Bumper cushion rubber pad		4	SSV
6	Bumper cushion rubber pad	GBT000701015	8	
7	Hexagonal flange bolts M10×1.25×20	GBT005789025	6	

ROCK SLIDERS – Villain (with adapter bracket)

1. Remove the original left (right) bumper of the vehicle.

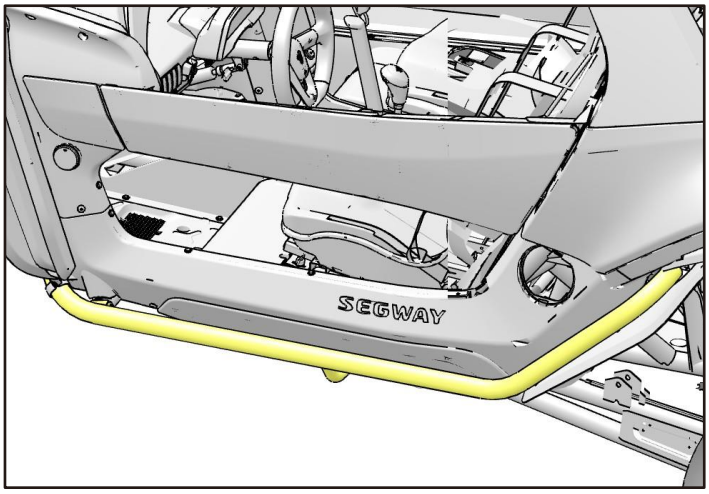

2. Install the welded components of the guard adapter bracket on the new left and right guard bars without tightening the bolts.

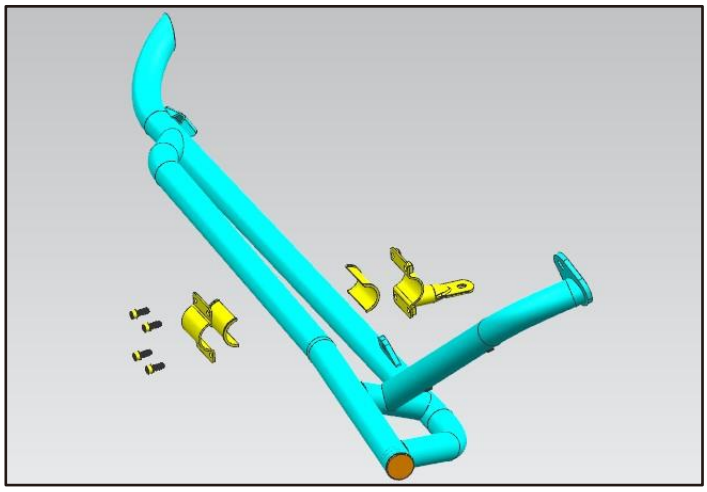

3. Install the combined left and right guard brackets respectively in the corresponding holes of the frame.

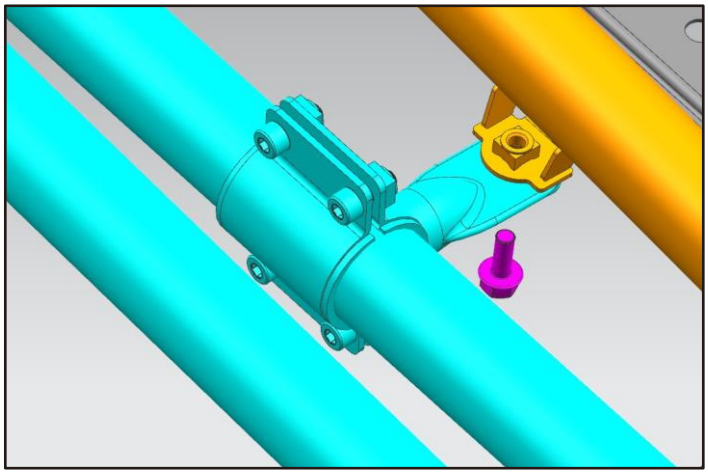

4. Adjust the front and rear installation positions of the guard bars.

5. Fix the three fixed points on the guard rod with bolts and tighten all the bolts.

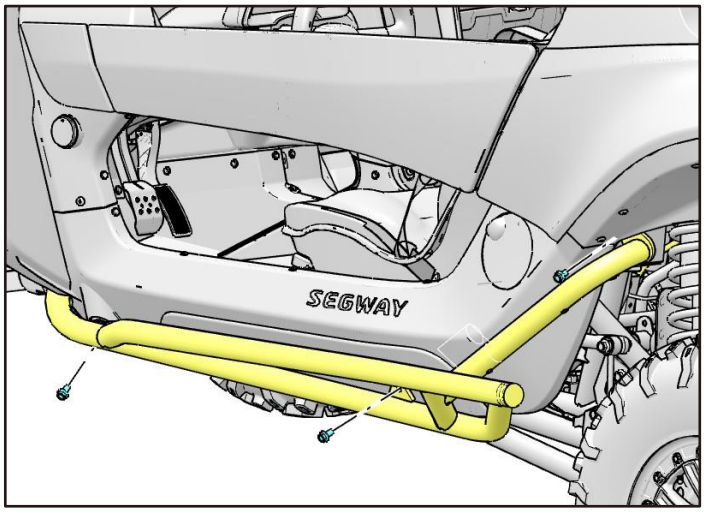

Power distributor assembly

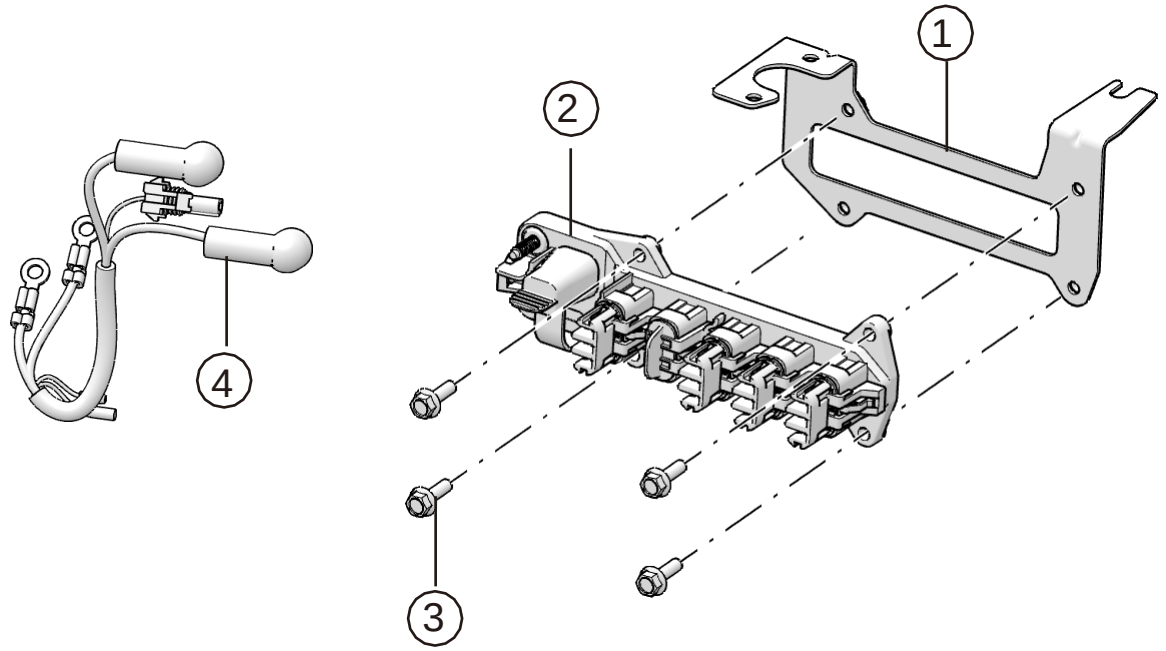

Serial number	Part name	Part number	quantity	Applicable vehicle type
1	Power distributor mounting bracket combination		1	SSV
2	Power distributor		1	SSV/UTV
	Power distributor adapter cable		1	SSV/UTV
8	Hexagon flange bolts M6x20	GBT005789008	4	

Power distributor assembly

1. Remove the maintenance cover

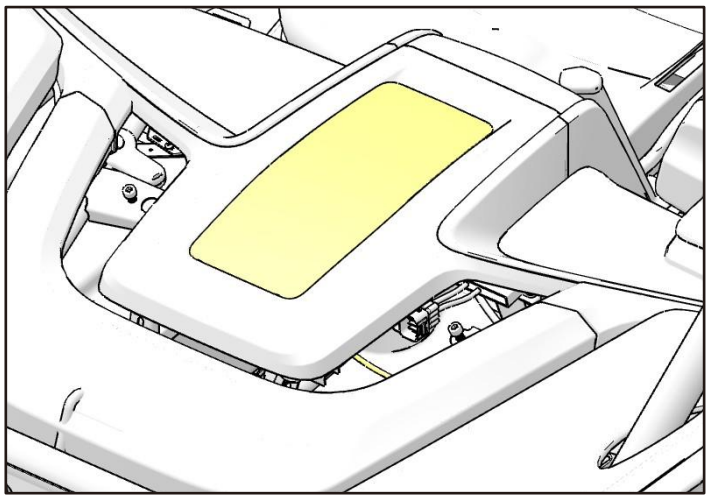

2. Remove the bolts from the capstan switch socket and move the capstan switch socket away.

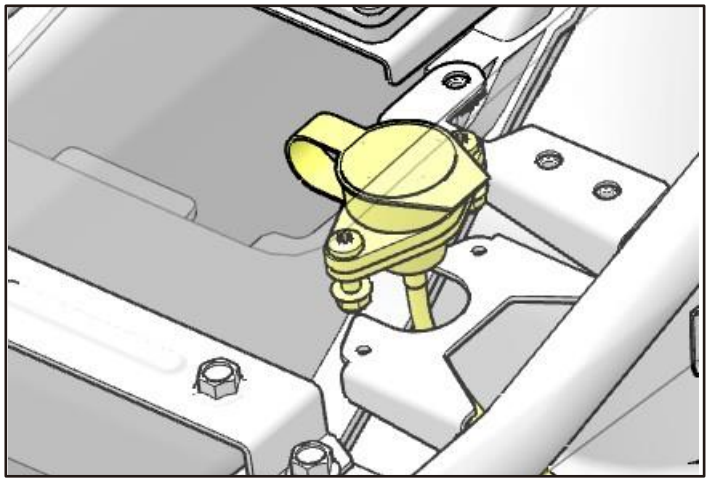

3.Install the power distributor on the power distributor bracket.

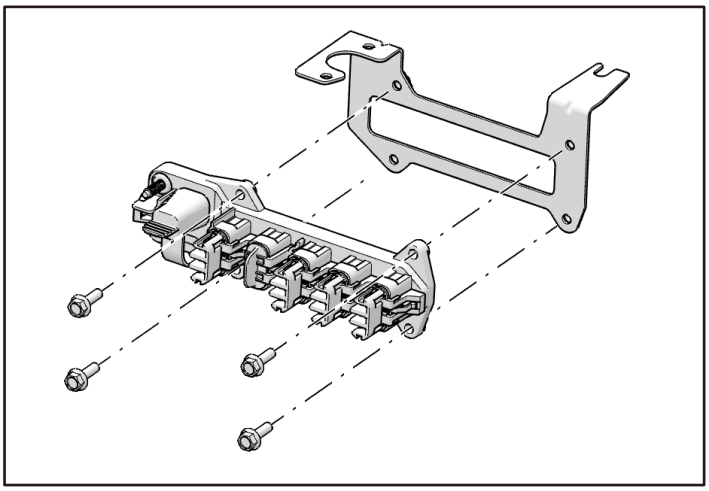

4.Install the power distributor under the maintenance cover, and fix the removed winch switch socket and the power distributor installation bracket

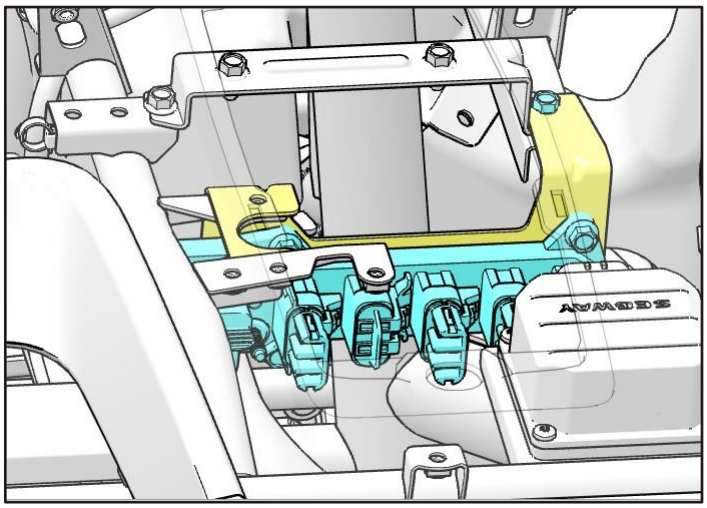

5.Connect the two ends of the power distributor adapter cable respectively to the corresponding positions, as shown in the following figure

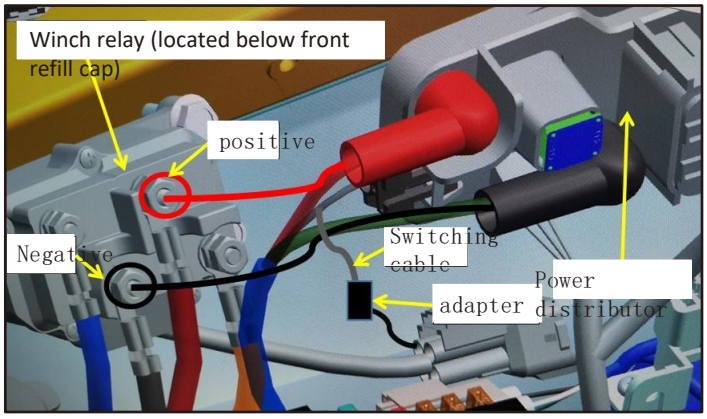

TIPS

Take power from the original winch relay and transfer it to the power distributor with three wires. The wiring diagram is shown in the following figure: red, black and gray.

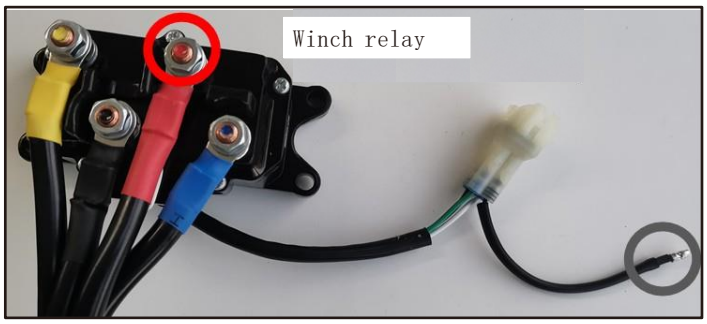

6. Re-bolt the winch switch socket and put the electrical service cover back in place.

AUDIO SYSTEM - VILLIAN

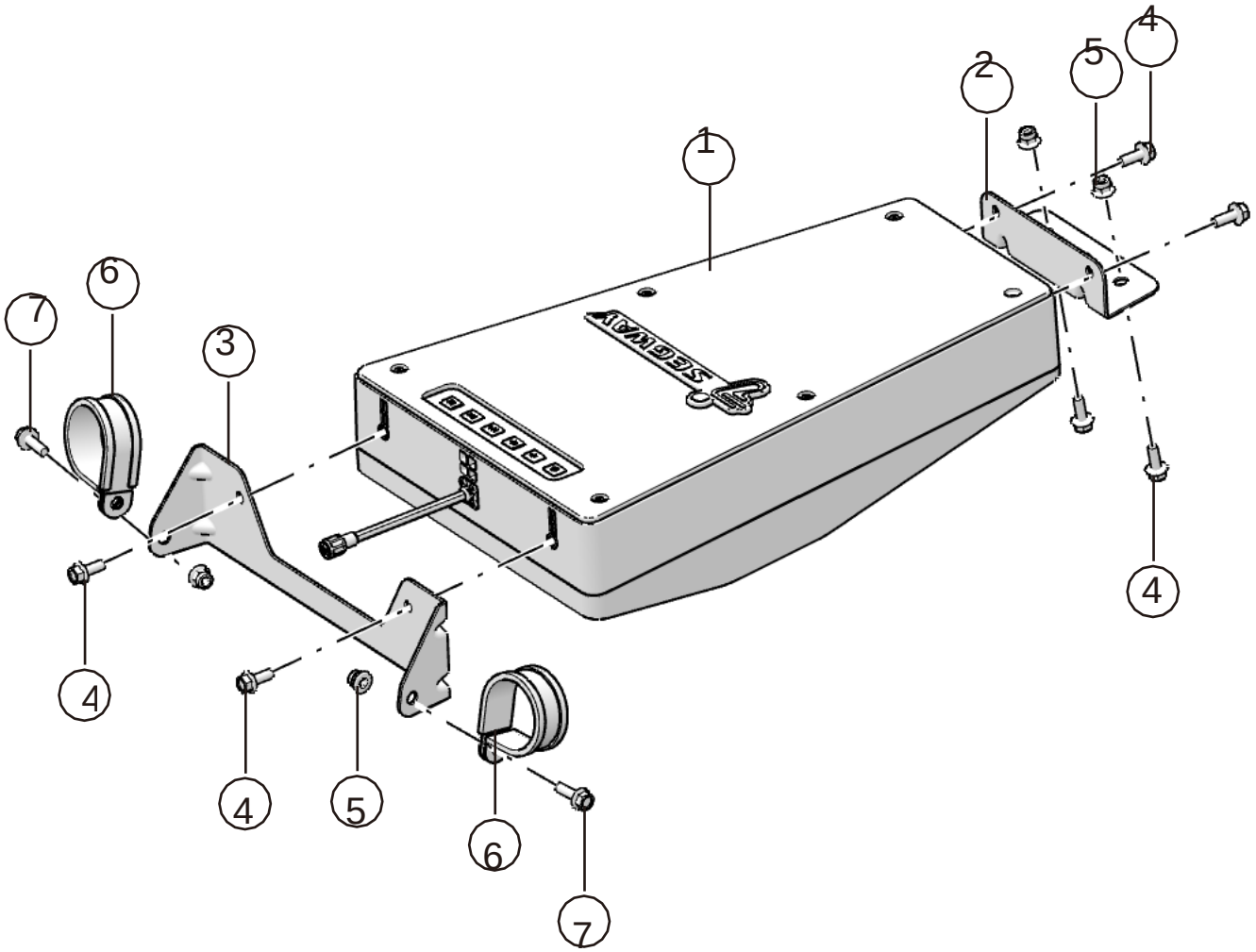

Serial number	Part name	Part number	Part number	Applicable vehicle type
1	Top beam speaker		1	SSV
2	Rear stand		1	SSV
3	Speaker front stand		1	SSV
4	Hexagon flange bolts M6x16		6	
5	Type 2 non-metal insert hexagon flange locking nut M6		4	
6	45 clamp (with rubber strip)	T05000080004	2	
7	Hexagon flange bolts M6x20	GBT005789008	2	

AUDIO SYSTEM - VILLIAN

1. Fix two mounting brackets on the top beam speaker.

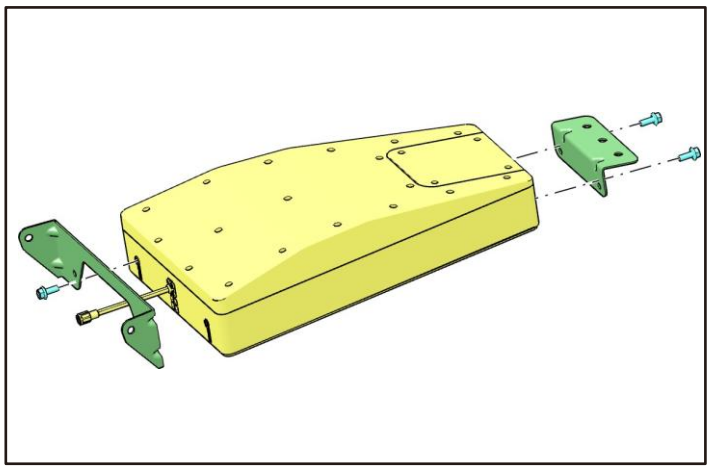

2. Fix the front of the speaker to the top beam round tube with 45 clamp (with rubber strip). The rear of the speaker is fixed with bolts and nuts.

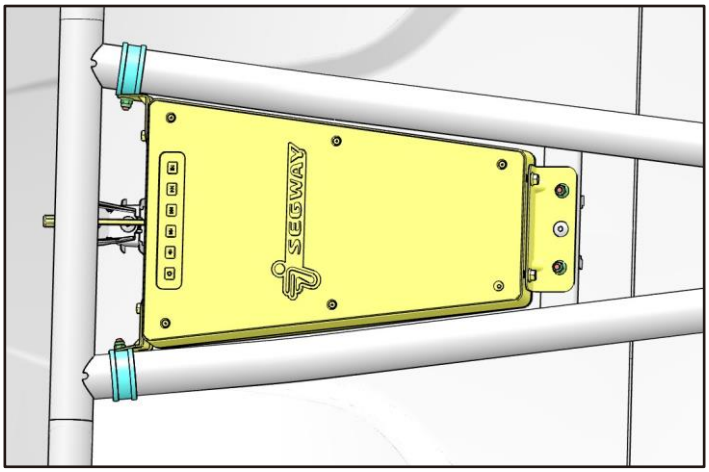

3. Arrange the power cables on the audio device and secure the cable ties in appropriate

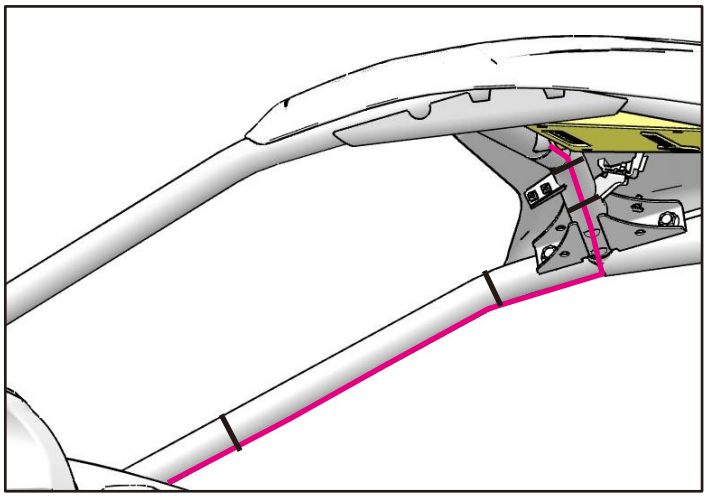
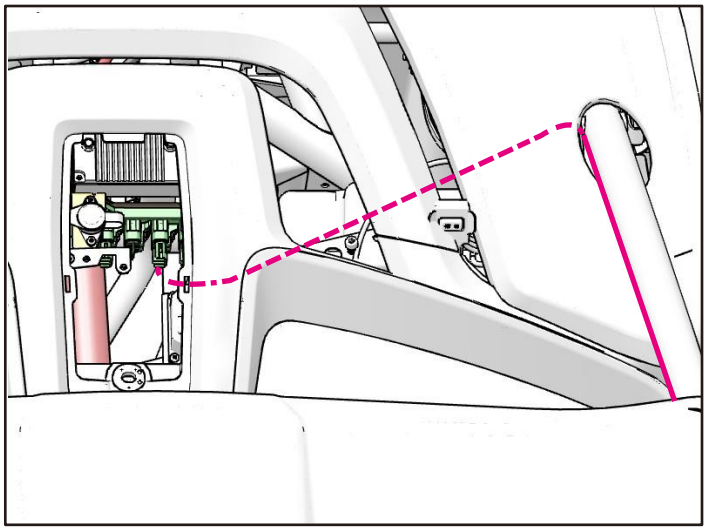
4.Run the power cord through the front panel along the right tube of the top beam, and connect the power cord socket to the power distributor, which is located under the electrical service cover.