SEGWAY

# SEGWAY AT10/AT10 W
# ACCESSORIES INSTALLATION MANUAL



segwaypowersports.com

V2.0

# HEATING CUSHION

## HEATING CUSHION

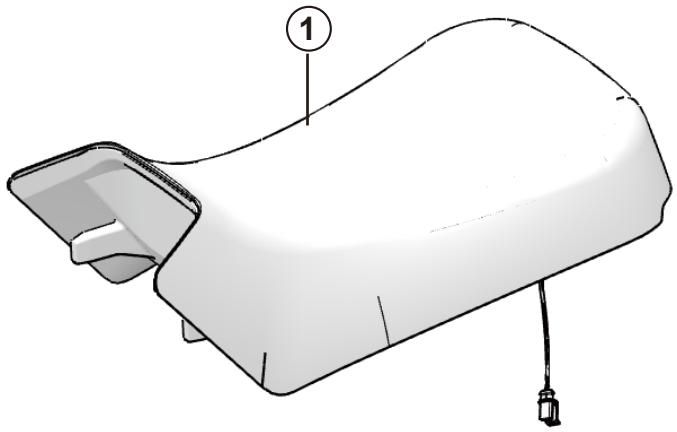


| ITEM | PART NAME | PART NUMBER | QTY | REMARKS |
|---|---|---|---|---|
| 1 | HEATING CUSHION | A12-K102000-000-00 | 1 | |
| | HEATING CUSHION, RED | A12-K103000-000-00 | 1 | |

## ORIGINAL CUSHION REMOVAL

1. remove the back seat.

2. Lift the seat cushion upwards. If there is a wiring harness, unplug the wiring harness plug and remove the seat cushion.

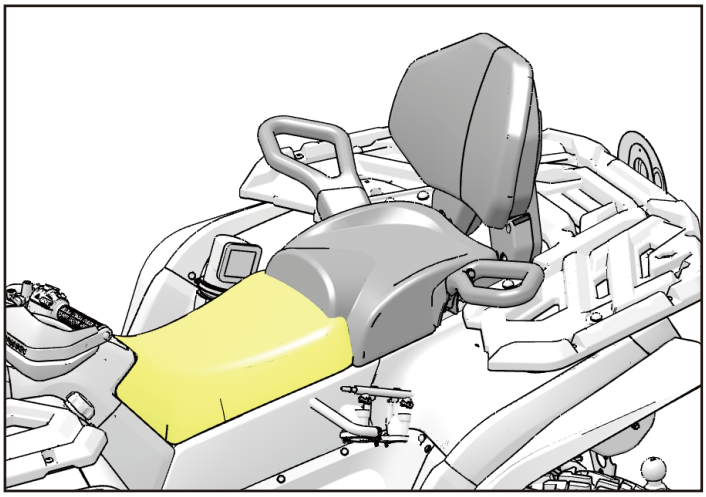

## INSTALLATION

1. Connect the plug on the heated seat cushion to the plug on the vehicle.

2. Insert the front of the seat cushion into the U-shaped bracket welded to the frame, push the seat forward with force, and press the seat down to lock it.

3. nstall the back seat.

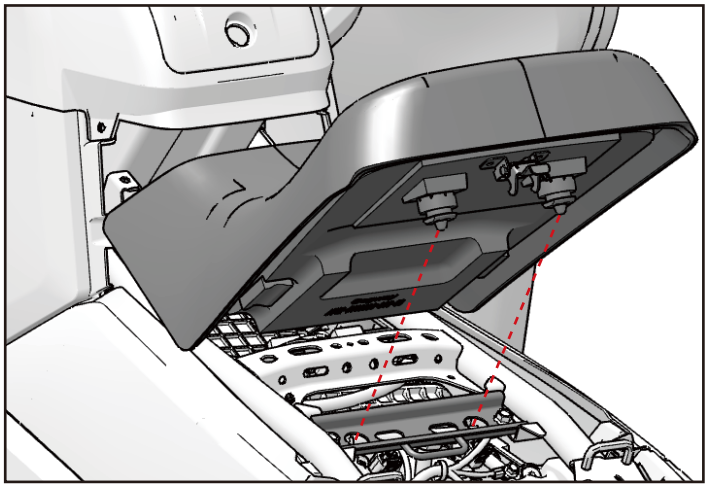

# SNOW PLOUGH ASSEMBLY

## Snow Plough Assembly

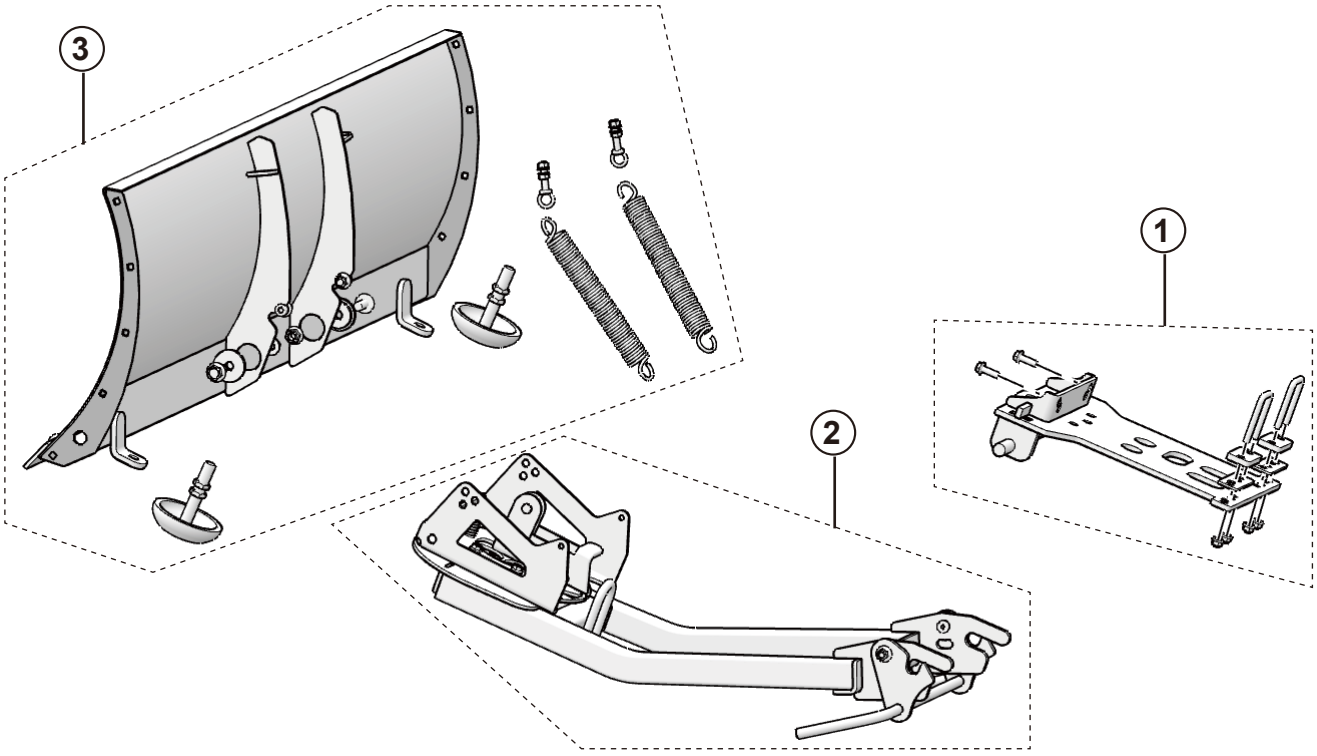


| ITEM | PART NAME | PART NUMBER | QTY | REMARKS |
|---|---|---|---|---|
| 1 | A12-R095400-FB3-00 | Adapter Bracket Assembly | 1 | |
| 4 | A12-R095300-FB3-00 | Blade Support Bracket Assembly | 1 | |
| 5 | A12-R095100-000-00 | Blade Assembly | 2 | |

**TIPS**

This installation guide applies to multiple models. Illustrations may vary slightly from the actual vehicle.
Always refer to the actual vehicle.

| TIPS |
| --- |
| The snow plough assembly must be used in conjunction with a winch. |

## SNOW PLOUGH ASSEMBLY INSTALLATION

1. Remove the four securing bolts from the front bumper guard panel.

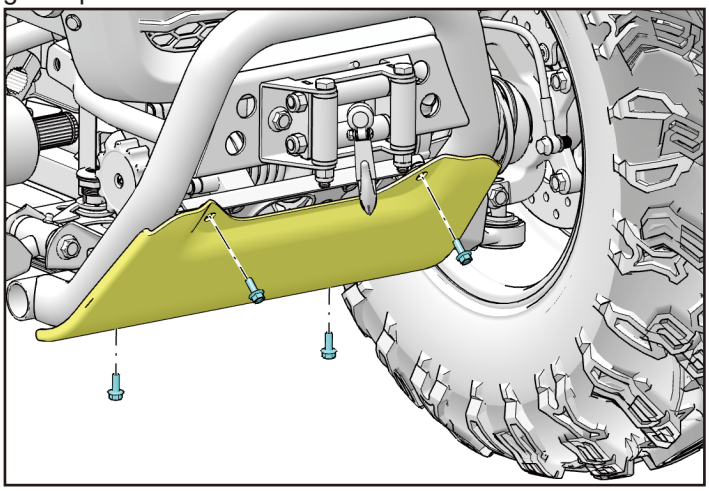

2. Remove the two securing bolts beneath the front bumper.

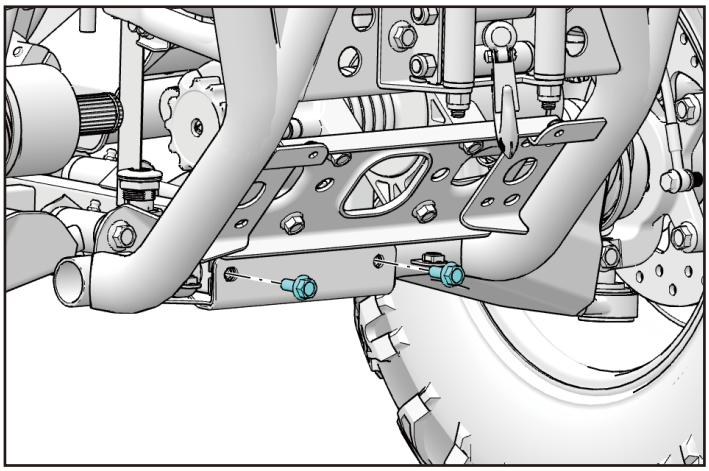

3. Position the front snow plough adapter assembly beneath the front of the vehicle and align the mounting holes with those beneath the front bumper. Secure the front snow plough adapter assembly to the front bumper using two hexagonal flange bolts M10 × 1.25 × 25. Do not fully tighten the bolts at this stage.

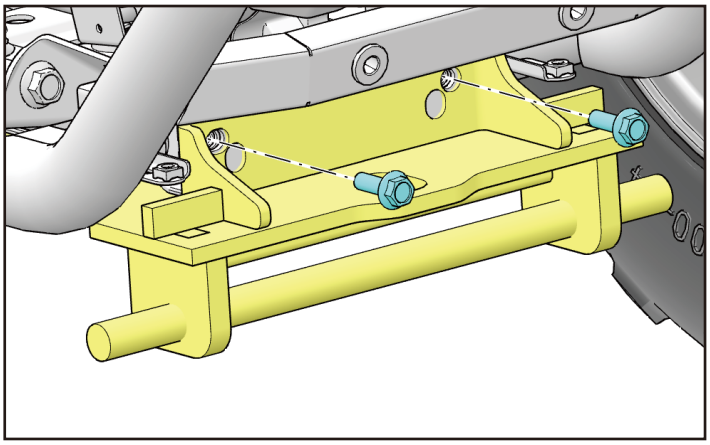

4. Adjust the front snow plough adapter assembly so that it is flush with the lower support tube of the front A-arm. Pass the U-bolts through the lower support tube of the A-arm, spacers and corresponding mounting holes in the front snow plough adapter assembly. Secure with four M8 nuts, then tighten all fasteners.

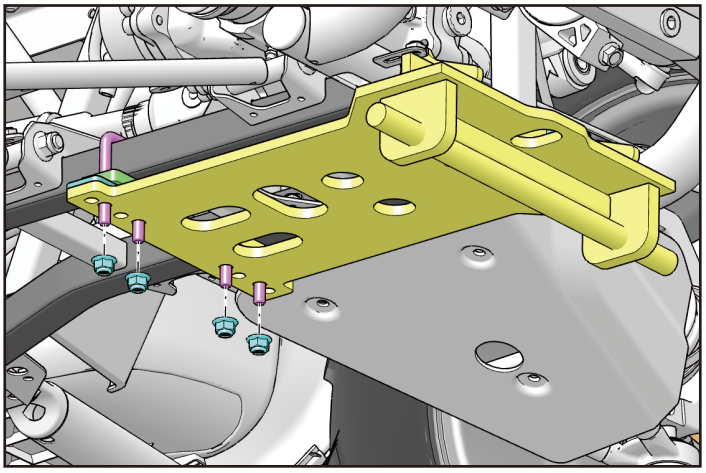

5. Lift the handle on the snow plough mounting bracket until the pivot shaft engages with the slot. Release the handle to lock the mounting bracket in position.

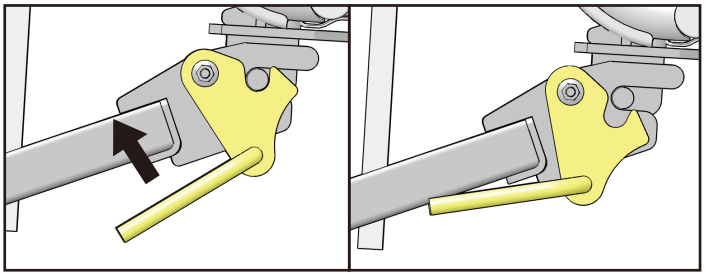

6. Secure the levelling plates to both sides of the snow plough using nuts. Adjust the height of the levelling plates by turning the nuts.

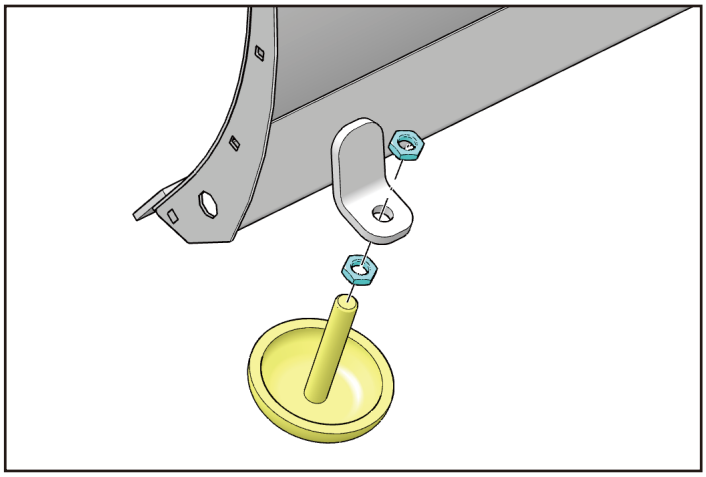

7. Install the welded blade assembly onto the snow plough mounting bracket using bolts, washers and nuts.

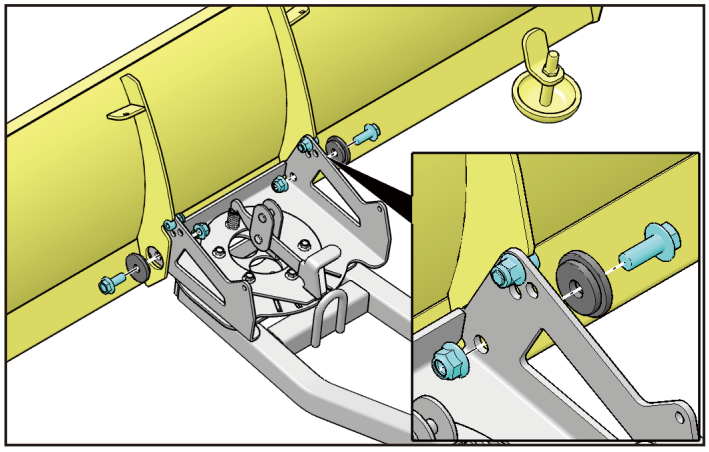

8. Connect the upper end of the welded blade assembly to the snow plough mounting bracket using springs and spring hooks.

